Bonfiglioli
Riduttori

C-A-F-S series

Helical gear units C
Helical bevel gear units A
Shaft mounted gear units F
Single stage gearboxes S

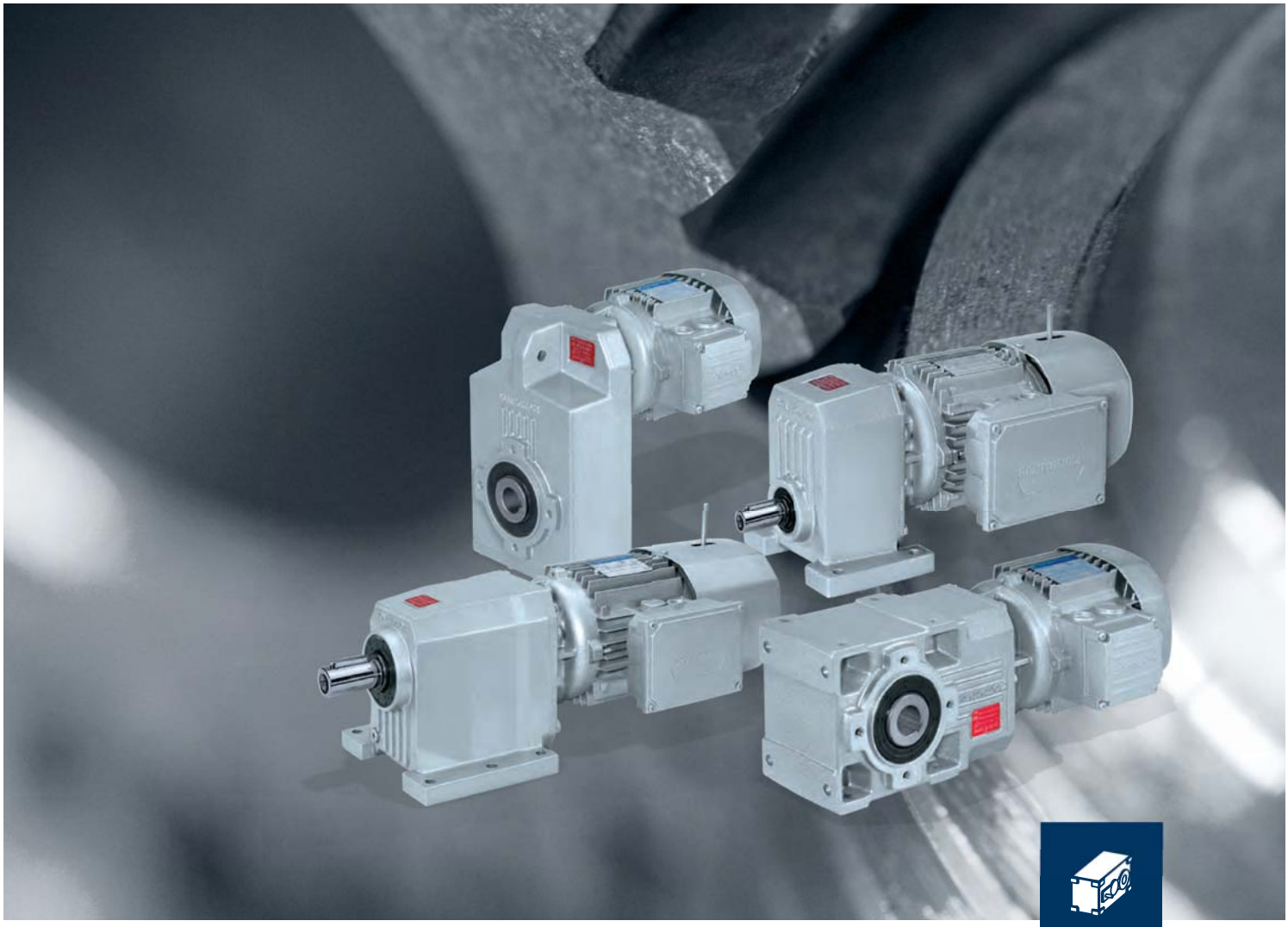

PRODUCT

Bonfiglioli
Forever Forward

GENERAL INFORMATION

1 SYMBOLS AND UNITS OF MEASURE

Symbols	Units of Measure	Description
$A_{N\,1,2}$	[N]	Permissible axial force
f_s	–	Service factor
f_T	–	Thermal factor
f_{TP}	–	Temperature factor
i	–	Gear ratio
I	–	Cyclic duration factor
J_C	[Kgm^2]	Mass moment of inertia to be driven
J_M	[Kgm^2]	Motor mass moment of inertia
J_R	[Kgm^2]	Mass moment of inertia for the gear unit
K	–	Mass acceleration factor
K_r	–	Transmission element factor
$M_{1,2}$	[Nm]	Torque
$M_{c\,1,2}$	[Nm]	Calculated torque
$M_{n\,1,2}$	[Nm]	Rated torque
$M_{r\,1,2}$	[Nm]	Torque demand
$n_{1,2}$	[min^{-1}]	Speed

Symbols	Units of Measure	Description
$P_{1,2}$	[kW]	Power
$P_{N\,1,2}$	[kW]	Rated power
$P_{R\,1,2}$	[kW]	Power demand
$R_{C\,1,2}$	[N]	Calculated radial force
$R_{N\,1,2}$	[N]	Permissible overhung load
S	–	Safety factor
t_a	[°C]	Ambient temperature
t_s	[°C]	Surface temperature
t_o	[°C]	Oil temperature
t_f	[min]	Work time under constant load
t_r	[min]	Rest time
η_d	–	Dynamic efficiency
η_s	–	Static efficiency
φ	[']	Output shaft angular backlash (with locked input shaft)

$_1$ value applies to input shaft

$_2$ value applies to output shaft

The symbol shows the page the information can be sorted from.

This symbol refers to the angle the overhung load applies (viewing from drive end).

Symbol refers to weight of gearmotors and speed reducers.
Figure for gearmotors incorporates the weight of the 4-pole motor and for life lubricated units, where applicable, the weight of the oil.

DANGER - WARNING
This symbol indicates situations of danger, which if ignored, may result in serious injury to the operator.

IMPORTANT
This symbol indicates important technical information.

Apply to equipment complying with “ATEX” Directive.

Series C	Series A	Series F	Series S	
				Gearmotor with compact motor.
IEC	IEC	IEC	IEC	Gearmotor with IEC motor.
IEC	IEC	IEC	IEC	Gear unit with IEC motor interface.
SERVO	SERVO	SERVO		Gear unit with servomotor input adapter.
				Speed reducer with solid input shaft.

2 ALLOWED TEMPERATURE LIMITS

Symbols	Description / Condition	Value (*)	
		Synthetic Oil	Mineral Oil
t_a	Ambient temperature		
$t_{au\ min}$	Minimum operating ambient temperature	**-30°C**	**-10°C**
$t_{au\ Max}$	Maximum operating ambient temperature	**+50°C**	**+40°C**
$t_{as\ min}$	Minimum storage ambient temperature	**-40°C**	**-10°C**
$t_{as\ Max}$	Maximum storage ambient temperature	**+50°C**	**+50°C**
t_s	Surface temperature		
$t_{s\ min}$	Minimum gearbox surface temperature starting with partial load (#)	**-25°C**	**-10°C**
$t_{sc\ min}$	Minimum gearbox surface temperature starting with full load	**-10°C**	**-5°C**
$t_{s\ Max}$	Maximum casing surface temperature during continuous operation (measured next to the gearbox input)	**+100°C**	**+100°C** (@)
t_o	Oil temperature		
$t_{o\ Max}$	Maximum oil temperature during continuous operation	**+95°C**	**+95°C** (@)

(*) = Refer to the table “Selection of the optimal oil viscosity” for further information about minimum and maximum values of different oil viscosity. For values of t_a < -20°C and t_s, t_o > 80 °C, choose (as permitted in the product configuration stage) the sealing type of the most suitable material to the type of application. If needed contact Bonfiglioli Technical Service.

(@) = Continuous operation it is not advised if t_s and t_o range is 80°C to 95 °C.

(#) = For full load start-up it is recommended to ramp-up and provide for greater absorption of the motor. If needed, contact Bonfiglioli Technical Service.

3 TORQUE

3.1 Rated torque M_{n2} [Nm]

The torque that can be transmitted continuously through the output shaft, with the gear unit operated under a service factor $f_s = 1$.
Rating is speed sensitive.

3.2 Required torque M_{r2} [Nm]

The torque demand based on application requirement.
It must always be equal to or less than torque M_{n2} the gearbox under study is rated for.

3.3 Calculated torque M_{c2} [Nm]

Computational torque value to be used when selecting the gearbox. It is calculated considering the required torque M_{r2} and service factor fs , as per the equation here after:

$$M_{c2} = M_{r2} \cdot f_s < M_{n2} \quad (1)$$

4 POWER

4.1 Rated power P_{n1} [kW]

In the gearbox selection charts this is the power applicable to input shaft, based on input speed n_1 and corresponding to service factor $f_s = 1$.

5 THERMAL CAPACITY P_t [kW]

P_t is the power that can be transmitted through the gear unit, under a continuous duty and an ambient temperature of 20 °C, without resulting into damage of the inner parts or degradation of the lubricant properties. Refer to chart (A1) for specific kW ratings.
In case of intermittent duty, or an operating ambient temperature other than the rated 20°C, the P_t value should be adjusted through the factor f_t , obtained from chart (A2), as per the following equation:
$P_t' = P_t \times f_t$

Gear units featuring more than 2 reductions and/or a gear ratio greater than i = 45 do not normally require the thermal limit to be checked as in these cases the thermal rating usually exceeds the mechanical rating.

(A 1)

P_t [kW] 20 °C		
	n_1 = 1400 min^{-1}	n_1 = 2800 min^{-1}
C 05 2	—	—
C 12 2	—	—
C 22 2	—	—
C 32 2	—	4.5
C 36 2	6.5	5.0
C 41 2	8.0	6.0
C 51 2	11.0	7.8
C 61 2	14.0	10.0
C 70 2	21	16.0
C 80 2	32	24
C 90 2	43	32
C 100 2	59	42

P_t [kW] 20 °C		
	n_1 = 1400 min^{-1}	n_1 = 2800 min^{-1}
A 05 2	2.0	1.5
A 10 2	2.1	1.5
A 20 2	6.0	5.4
A 30 2	8.0	6.6
A 35 2	9.5	8.2
A 41 2	11.5	9.6
A 50 2	20	18.0
A 55 2	21	18.0
A 60 2	27	23
A 70 3	31	24
A 80 3	44	33
A 90 3	64	48

P_t [kW] 20 °C		
	n_1 = 1400 min^{-1}	n_1 = 2800 min^{-1}
F 10 2	3.8	2.7
F 20 2	9.1	6.5
F 25 2	10.2	7.4
F 31 2	11.7	8.5
F 41 2	14.3	10.4
F 51 2	21.5	15.0
F 60 3	26.0	18.9
F 70 3	36.4	26.0
F 80 3	52	36
F 90 3	75	53

P_t [kW] 20 °C		
	n_1 = 1400 min^{-1}	n_1 = 2800 min^{-1}
S 10 1	5.5	4.9
S 20 1	7.8	7.2
S 30 1	10.0	9.1
S 40 1	15.6	14.3
S 50 1	21	18.9

(A 2)

f_t					
t_a [°C]	Continuous duty	Intermittent duty			
		Degree of intermittence [I]			
		80%	**60%**	**40%**	**20%**
40	0.80	1.1	1.3	1.5	1.6
30	0.85	1.3	1.5	1.6	1.8
20	1.0	1.5	1.6	1.8	2.0
10	1.15	1.6	1.8	2.0	2.3

Where cyclic duration factor (I)% is the relationship of operating time under load t_f to total time ($t_f + t_r$) expressed as a percentage.

$$I = \frac{t_f}{t_f + t_r} \cdot 100 \qquad (2)$$

The condition to be verified is:

$$P_{r1} \leq P_t \ x \ f_t \qquad (3)$$

6 EFFICIENCY

6.1 Dynamic efficiency η_d

Obtained from the relationship of delivered power P_2 to input power P_1 , according to the following equation:

$$\eta_d = \frac{P_2}{P_1} \cdot 100 \qquad [\%] \qquad (4)$$

(A 3)

	**2 x**	**3 x**	**4 x**
η_d	95%	93%	90%

	**2 x**	**3 x**	**4 x**
η_d	94%	91%	89%

	**2 x**	**3 x**	**4 x**
η_d	95%	93%	90%

	**1 x**
η_d	98%

7 GEAR RATIO i

The value for the gear ratio is referred to with the letter [i] and calculated through the relationship of the input speed n_1 to the output speed n_2:

$$i = \frac{n_1}{n_2} \qquad (5)$$

The gear ratio is usually a decimal number which in this catalogue is truncated at one digit after the comma (no decimals for i > 1000).
If interested in knowing the exact value see also chapters “EXACT RATIOS”.

8 ANGULAR VELOCITY

8.1 Input speed n_1 [min^{-1}]

The speed is related to the prime mover selected. Catalogue values refer to speed of either single or double speed motors that are common in the industry.
If the gearbox is driven by an external transmission it is recommended to operate it with a speed of 1400 min-1, or lower, in order to optimise operating conditions and lifetime.
Higher input speeds are permitted, however in this case consider that torque rating M_{n2} is affected adversely.
Please consult a Bonfiglioli representative.

8.2 Output speed n_2 [min^{-1}]

The output speed value n_2 is calculated from the relationship of input speed n_1 to the gear ratio i, as per the following equation:

$$n_2 = \frac{n_1}{i} \qquad (6)$$

9 MOMENT OF INERTIA J_r [Kgm^2]

Moments of inertia specified in the catalogue refer to the gear unit input axis.
They are therefore related to motor speed, in the case of direct motor mounting.

10 SERVICE FACTOR f_s

This factor is the numeric value describing reducer service duty. It takes into consideration, with unavoidable approximation, daily operating conditions, load variations and overloads connected with reducer application. In the graph (A4) below, after selecting proper “daily working hours” column, the service factor is given by intersecting the number of starts per hour and one of the K1, K2 or K3 curves. K_ curves are linked with the service nature (approximately: uniform, medium and heavy) through the acceleration factor of masses K, connected to the ratio between driven masses and motor inertia values. Regardless of the value given for the service factor, we would like to remind that in some applications, which for example involve lifting of parts, failure of the reducer may expose the operators to the risk of injuries. If in doubt, please contact our Technical Service Department.

(A 4)

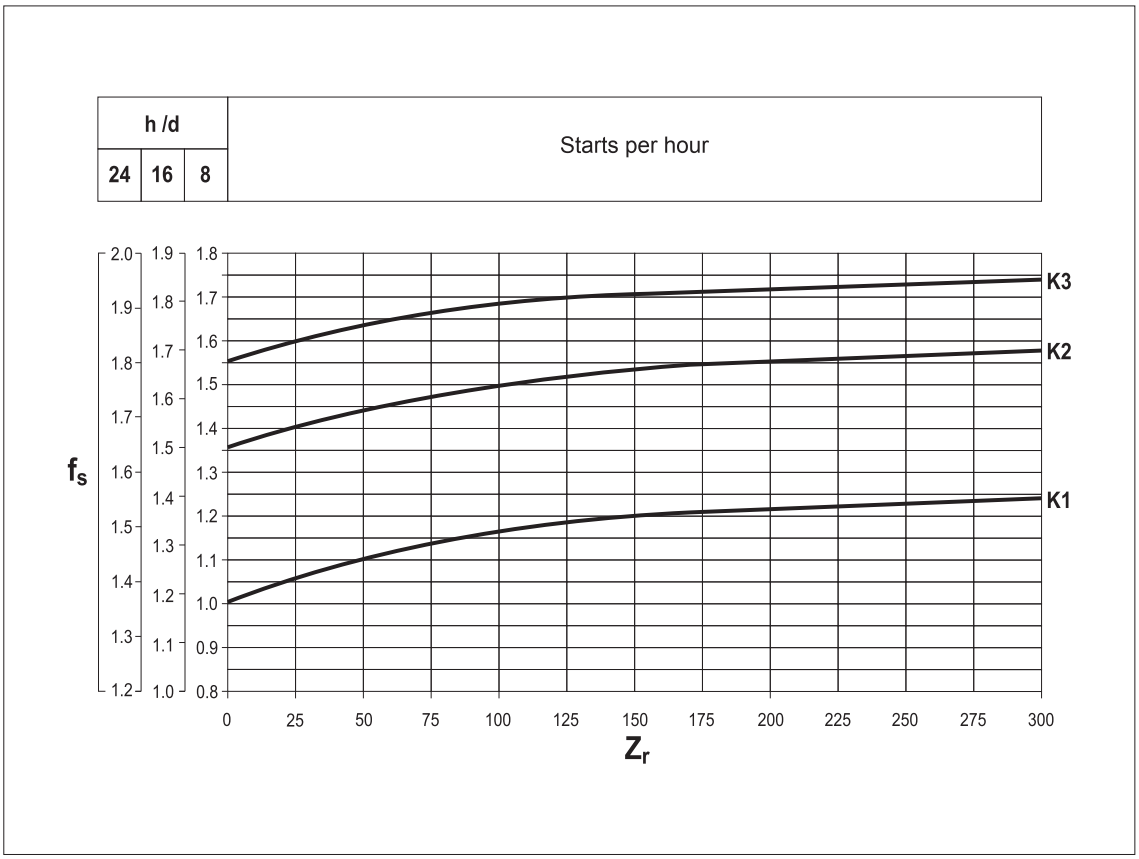

10.1 Acceleration factor of masses K

This parameter serves for selecting the right curve for the type of load.
The value is given by the following ratio:

(A 5)

$K = \frac{J_c}{J_m}$ →	J_c =	Moment of inertia of driven masses referred to motor drive shaft
	J_m =	Motor moment of inertia

K ≤ 0,25	→	**K1**	Uniform load
0,25 < K ≤ 3	→	**K2**	Moderate shock load
3 < K ≤ 10	→	**K3**	Heavy shock load
K > 10	→		Please consult Bonfiglioli Technical Service

11 LUBRICATION

Life lubricated gearboxes do not require any periodical oil changes.
Refer to the User's Manual available at www.bonfiglioli.com for indications about checking the oil level and its replacement for other types of gearboxes.
Do not mix mineral oils with synthetic oils and/or different brands.
However, oil level should be checked at regular intervals and topped up as required.
Check monthly if unit operates under intermittent duty, more frequently if duty is continuous.

11.1 Selection of the optimal oil viscosity (data relating to Shell Oils)

(A 6)

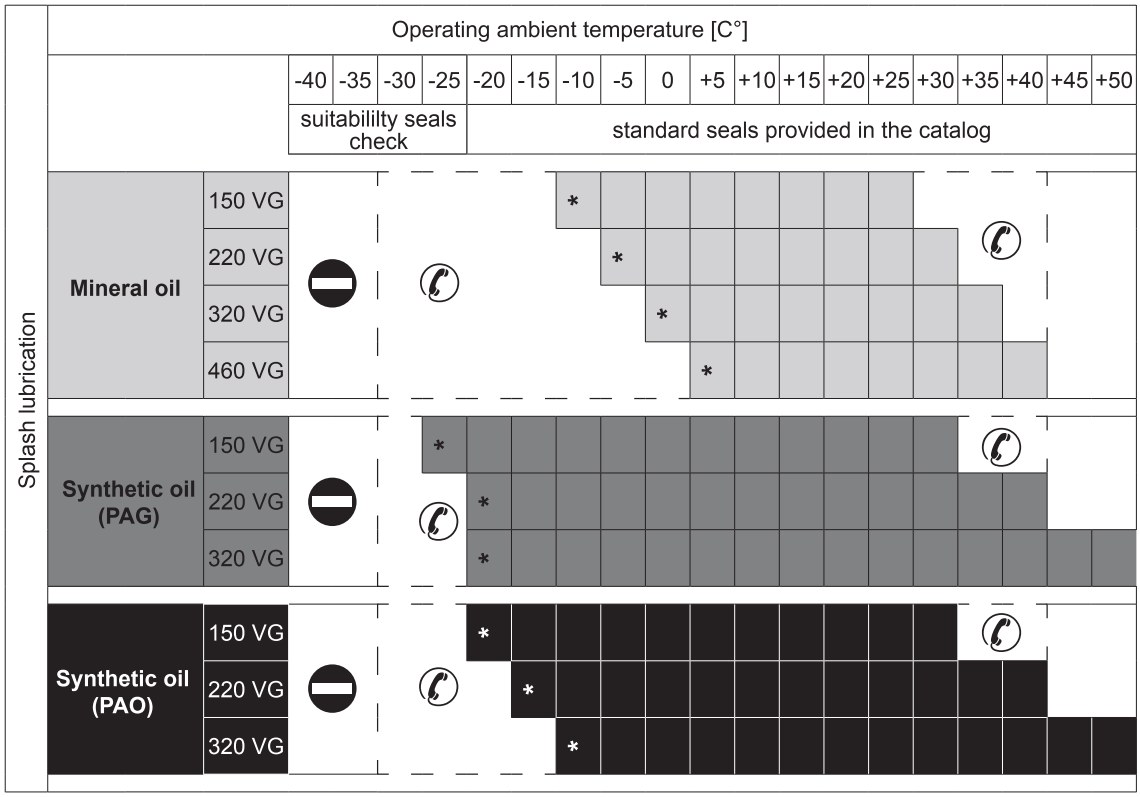

Recommended operating limits

Allowed operating limits.

Forbidden operating limits.

* = It is recommended to ramp-up and to provide for greater absorption of the motor.
If needed and in the event of impulse loads, contact Bonfiglioli Technical Service.

11.2 Lubrication for C, A, F, S series gearboxes

The inner parts of Bonfiglioli gear units are oil-bath and splash lubricated.
Frame sizes C 05...C 41, A 05...A 41, F 10...F 41, S 10...S 40 are supplied by the factory, or by the authorized dealers, already filled with oil.
Unless otherwise specified, units size C 51, A 50, F 51, S 50 and larger are usually supplied unlubricated at it will be the customer care to fill them with oil prior to putting them into operation.
In both cases, depending on the version, prior to putting the gear unit into operation may need to replace the closed plug used for transportation purposes with breather plug supplied with.
For the reference charts of oil plugs placement and quantity of lubricant, refer to the Installation, Operation and Maintenance Manual (available on www.bonfiglioli.com).
The “long life” poliglycol-based lubricant supplied by the factory, in the absence of contamination, does not require periodical oil changes throughout the lifetime of the gear unit.

11.3 Lubrication for A-EX (Atex) gearboxes

The inner parts of Bonfiglioli gear units are oil-bath and splash lubricated.
The ATEX version gear unit (with some exceptions see Table below) are factory-charged with “long-life” lubricant SHELL OMALA S4 WE 320 in the quantity suitable for the mounting position specified in the order.

(A 7)

A 05	A 10	A 20	A 30	A 35	A 41	A 50	A 55 [1]	A 60 2 [2]	A 60 3 [1]	A 60 4 [1]	A 70 [1]	A 80 [1]	A 90 [1]

Gearbox pre-filled with a synthetic “for life” lubricant Gearbox pre-filled with a synthetic lubricant

(1) Without lubricant for mounting positions B6 and B7
(2) Without lubricant for mounting positions B6, B7 and VB

Gearboxes are fitted with sealed filler plugs for transport purposes. Depending on version, they may be supplied with a vented plug which the user must fit before putting the gearbox into service.
Refer to the installation, operation and maintenance manual to replace the filler plug correctly. (These manuals are available in a number of languages and can be downloaded in pdf format from the website www.bonfiglioli.com.)
When a gearbox is supplied with no lubricant, it is recommended to fill it with a lubricant of a similar type, selected from those listed in its installation, operation and maintenance manual.

12 SELECTION

Some fundamental data are necessary to assist the correct selection of a gearbox or gearmotor. The table below (A7) briefly sums up this information.
To simplify selection, fill in the table and send a copy to our Technical Service which will select the most suitable drive unit for your application.

(A 8)

	Type of application	
P_{r2}	Output power at n_2 max	.....kW
P_{r2}'	Output power at n_2 min	.....kW
M_{r2}	Output torque at n_2 max	.....Nm
n_2	Max.output speed	.....min^{-1}
n_2'	Min.output speed	.....min^{-1}
n_1	Max.input speed	.....min^{-1}
n_1'	Min.input speed	.....min^{-1}
R_{c2}	Radial load on output shaft	.....N
x_2	Load application distance (*)	.....mm
	Load orientation at output	..... 
	Output shaft rotation direction (CW-CCW) (**)	.....
R_{c1}	Radial load on input shaft	.....N
x_1	Load application distance (*)	.....mm
	Load orientation at input	..... 
	Input shaft rotation direction (CW-CCW) (**)	.....
A_{c2}	Thrust load on output shaft (+/–)(***)	.....N

A_{c1}	Thrust load on input shaft (+/–)(***)	.....N
J_c	Moment of inertia of the load	.....Kgm^2
t_a	Ambient temperature	.....C°
	Altitude above sea level	.....m
	Duty type to IEC norms	S...../.....%
Z	Starting frequency	.....1/h
	Motor voltage	V
	Brake voltage	V
	Frequency	.....Hz
M_b	Brake torque	.....Nm
	Motor protection degree	IP.....
	Insulation class	.....

(*) Distance x1-2 is between force application point and shaft shoulder (if not indicated the force acting at mid-point of the shaft extension will be considered).

(**) CW = clockwise;
CCW = counterclockwise

(***) + = push
– = pull

For the selection of Series A gear units in Atex configuration, see also the specific chapter on page 322.

12.1 Selection of a gearmotor

a) Determine service factor f_s according to type of duty (factor K), number of starts per hour Z_r and hours of operation.

$$P_{r1} = \frac{M_{r2} \cdot n_2}{9550 \cdot \eta_d} \text{ [kW]} \quad (7)$$

b) From values of torque M_{r2}, speed n_2 and efficiency η_d the required input power can be calculated from the equation:

Value of η_d for the captioned gear unit can be sorted out from paragraph 6.

$$P_n \geq P_{r1} \quad (8)$$

c) Consult the gearmotor selection charts and locate the table corresponding to normalised power P_n:

Unless otherwise specified, power P_n of motors indicated in the catalogue refers to continuous duty S1. For motors used in conditions other than S1, the type of duty required by reference to CEI 2-3/IEC 34-1 Standards must be mentioned.
For duties from S2 to S8 in particular and for motor frame 132 or smaller, extra power output can be obtained with respect to continuous duty.
Accordingly the following condition must be satisfied:

$$P_n \geq \frac{P_{r1}}{f_m} \quad (9)$$

The adjusting factor f_m can be obtained from table (A9).

12.2 Intermittence ratio

$$I = \frac{t_f}{t_f + t_r} \cdot 100 \quad (10)$$

t_f = work time at constant load
t_r = rest time

(A 9)

	DUTY						
	S2			**S3***			**S4 - S8**
	Cycle duration [min]			Cyclic duration factor (I)			Please contact us
	10	**30**	**60**	**25%**	**40%**	**60%**	
f_m	1.35	1.15	1.05	1.25	1.15	1.1	

* Cycle duration, in any event, must be 10 minutes or less. If it is longer, please contact our Technical Service.

Next, refer to the appropriate $\mathbf{P_n}$ section within the gearmotor selection charts and locate the unit that features the desired output speed $\mathbf{n_2}$, or closest to, along with a safety factor **S** that meets or exceeds the applicable service factor $\mathbf{f_s}$.

The safety factor is so defined:

$$S = \frac{M_{n2}}{M_2} = \frac{P_{n1}}{P_1} \qquad (11)$$

As standard, gear and motor combinations are implemented with 2, 4 and 6 pole motors, 50 Hz supplied.
Should the drive speed be different from 2800, 1400 or 900 min^{-1}, base the selection on the gear unit nominal rating.

12.3 Selection of speed reducer and gearbox with IEC motor adapter

a) Determine service factor f_s.

b) Assuming the required output torque for the application M_{r2} is known, the calculation torque can be then defined as:

$$M_{c2} = M_{r2} \cdot f_s \qquad (12)$$

c) The gear ratio is calculated according to requested output speed n_2 and drive speed n_1:

$$i = \frac{n_1}{n_2} \qquad (13)$$

Once values for M_{c2} and i are known consult the rating charts under the appropriate input speed n_1 and locate the gear unit that features the gear ratio closest to [i] and at same time offers a rated torque value M_{n2} so that:

$$M_{n2} \geq M_{c2} \quad (14)$$

If a IEC normalized motor must be fitted check geometrical compatibility with the gear unit at paragraph “MOTOR AVAILABILITY”.

13 VERIFICATION

After the selection of the speed reducer, or gearmotor, is complete it is recommended that the following verifications are conducted:

a) Thermal capacity
Make sure that the thermal capacity of the gearbox is equal to or greater than the power required by the application according to equation (3) on page 7.
If this condition is not verified, select a larger gearbox or apply a forced cooling system.

b) Maximum torque
The maximum torque (intended as instantaneous peak load) applicable to the gearbox must not, in general, exceed 200% of rated torque M_{n2}. Therefore, check that this limit is not exceeded, using suitable torque limiting devices, if necessary.
For three-phase double speed motors, it is important to pay attention to the switching torque which is generated when switching from high to low speed, because it could be significantly higher than maximum torque.
A simple, economical way to minimize overloading is to power only two phases of the motor during switch-over (power-up time on two phases can be controlled with a time-relay):

$M_{g2} = 0.5 \cdot M_{g3}$
M_{g2} = Switching torque with two-phase power-up
M_{g3} = Switching torque with three-phase power-up

We recommend, in any event, to contact our Technical Service.

c) Radial loads
Make sure that radial forces applying on input and/or output shaft are within permittend catalogue values.
If they were higher consider designing a different bearing arrangement before switching to a larger gear unit.
Catalogue values for rated overhung loads refer to mid-point of shaft under study.
Should application point of the overhung load be localised further out the revised loading capability must be adjusted as per instructions given in this manual.
Please refer to the paragraphs relating to radial loads.

d) Thrust loads
Actual thrust load must be found within 20% of the equivalent overhung load capacity.
Should an extremely high, or a combination of radial and axial load apply, consult Bonfiglioli Technical Service.

e) Starts per hour
For duties featuring a high number of switches the actual starting capability in loaded condition [Z] must be calculated.
Actual number of starts per hour must be lower than value so calculated.

14 INSTALLATION

The following installation instructions must be observed:

a) Make sure that the gearbox is correctly secured to avoid vibrations.
If shocks or overloads are expected, install hydraulic couplings, clutches, torque limiters, etc.

b) Before being paint coated, the machined surfaces and the outer face of the oil seals must be protected to prevent paint drying out the rubber and jeopardising the sealing function.

c) Parts fitted on the gearbox output shaft must be machined to ISO H7 tolerance to prevent interference fits that could damage the gearbox itself.
Further, to mount or remove such parts, use suitable pullers or extraction devices using the tapped hole located at the top of the shaft extension.

d) Mating surfaces must be cleaned and treated with suitable protective products before mounting to avoid oxidation and, as a result, seizure of parts.

e) Prior to putting the gear unit into operation make sure that the equipment that incorporates the same complies with the current revision of the Machines Directive 2006/42/EC.

f) Before starting up the machine, make sure that oil level conforms to the mounting position specified for the gear unit and the viscosity is adequate (refer to the User's Manual available at www.bonfiglioli.com).

g) For outdoor installation provide adequate guards in order to protect the drive from rainfalls as well as direct sun radiation.

14.1 Fitting servomotors to gear heads featuring a clamping device (adapter type SC)

Turn the clamping device until its slot is aligned to those that are milled on the reducer input shaft. If the motor shaft features a key, this must be removed and the relevant keyway must also be aligned with the slots of clamping device and gear head input shaft, prior to inserting the servomotor into site. The keyway must be sitting on the same side as the locking screw. Tighten the bolts that hold the servomotor to the gear head, insert a torque wrench through the hole on the side of the flange and tighten the locking screw of the clamping device to the torque that is specified in the drawing section for the given adapter.

15 INSTALLATION INSTRUCTIONS

Schemes in table (A10) show the 3 possible installation patterns for A gear units to the machine frame. For each of these circumstances, table (A11) indicates exagonal head screw sizes to be used. Besides, to facilitate the installation, we suggest to use a wrench of the type shown in table (A10).

(A 10)

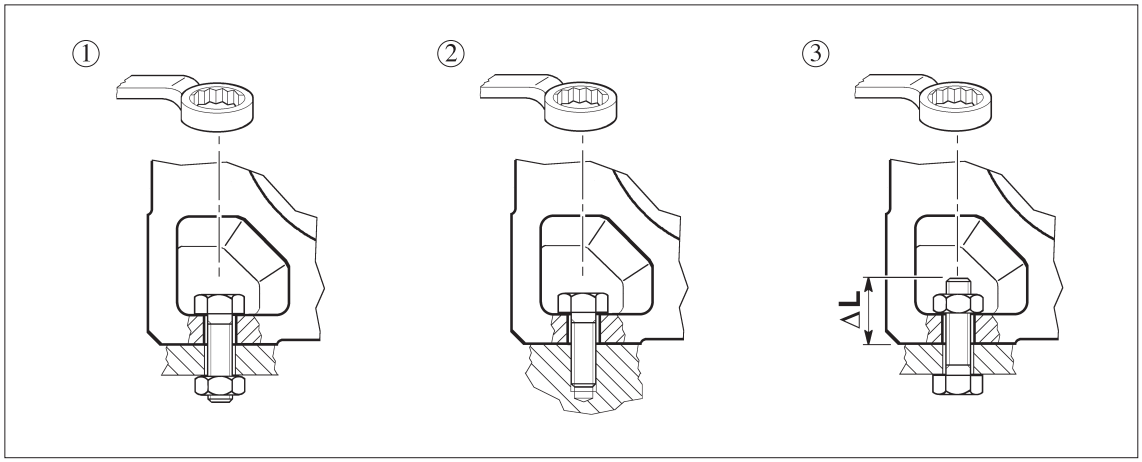

(A 11)

	Bolt type			
	①	②	③	ΔL (mm)
A 05	M8x22	M8x20	M8x ...	22
A 10	M8x25	M8x20	M8x …	20
A 20	M8x25	M8x20	M8x …	20
A 30	M10x30	M10x25	M10x …	25
A 35	M10x30	M10x25	M10x ...	25
A 41	M12x35	M12x30	M12x …	30

	Bolt type			
	①	②	③	ΔL (mm)
A 50	M14x45	M14x40	M14x …	35
A 55	M14x40	M14x40	M14x ...	35
A 60	M16x50	M16x45	M16x …	40
A 70	M20x60	M20x55	M20x …	45
A 80	M24x70	M24x65	M24x …	55
A 90	M24x90	M24x80	M24x …	65

16 STORAGE

Observe the following instructions to ensure correct storage of the products:

a) Do not store outdoors, in areas exposed to weather or with excessive humidity.

b) Always place boards, wood or other material between the products and the floor.
The gearboxes should not have direct contact with the floor.

c) In case of long-term storage all machined surfaces such as flanges, shafts and couplings must be coated with a suitable rust inhibiting product (Mobilarma 248 or equivalent).

Furthermore gear units must be placed with the fill plug in the highest position and filled up with oil. Before putting the units into operation the appropriate quantity, and type, of oil must be restored (refer to the User's Manual available at www.bonfiglioli.com).

17 CONDITIONS OF SUPPLY

Gear units are supplied as follows:

a) configured for installation in the mounting position specified when ordering;

b) tested to manufacturer specifications;

c) mating machined surfaces come unpainted;

d) nuts and bolts for mounting motors are provided;

e) shafts are protected during transportation by plastic caps;

f) supplied with lifting lug (where applicable).

18 PAINT SPECIFICATIONS

Specifications for paint applied to gearboxes (where applicable) may be obtained from the branches or dealers that supplied the units.

53 DESIGN FEATURES

The main design characteristics are:
- modularity
- space effectiveness
- universal mounting
- high efficiency
- quite operation
- gears in hardened and case-hardened steel
- bare aluminium housing for sizes 10, 20 and 25,
  high strength painted cast-iron housings for larger frame sizes.

(D 44)

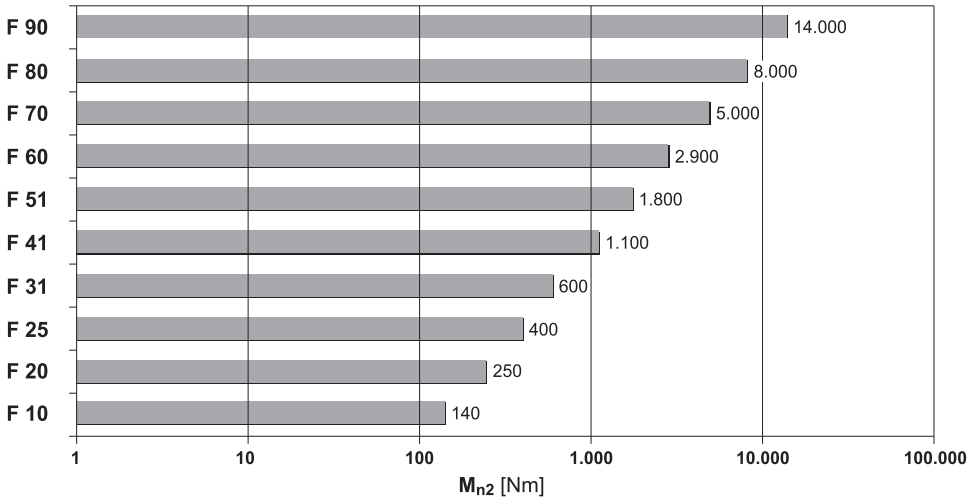

* For any limitations regarding construction type QF see the “VERSIONS” chapter.

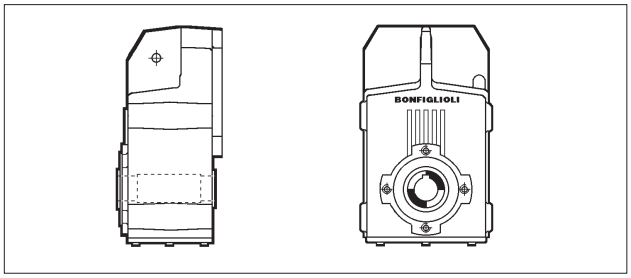

H

Hollow output shaft and keyway

F 10 ... F 90

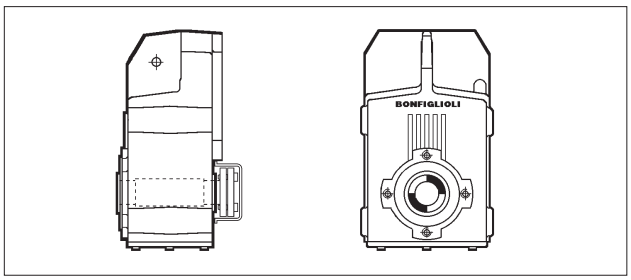

S

Hollow output shaft and shrink disc

F 10 ... F 90

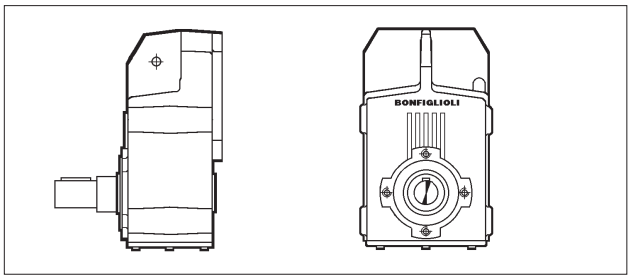

R

Solid output shaft

F 10 ... F 90

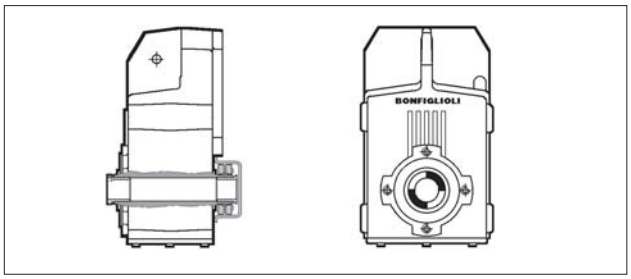

QF (Quick-fit)

Hollow shaft with adapter bushings and shrink disc

F 10 ... F 60

$M_{n2\ max}$ [Nm]	
F 25 QF30	350
F 41 QF42	850
F 41 QF45	1000
F 51 QF50	1750

Basic versions with bolted flange

The sketches show the applicable flanges to the basic versions.

H... F...

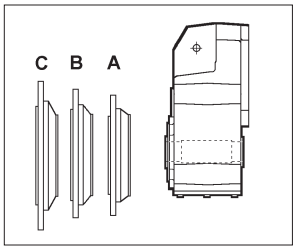

S F...

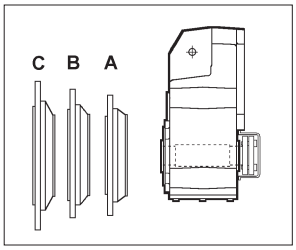

R F...

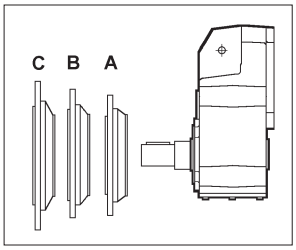

QF...

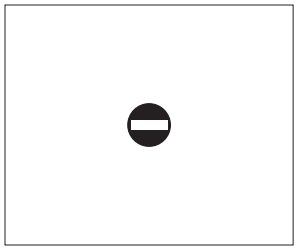

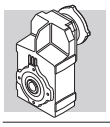

55 DESIGNATION

GEAR UNIT

F 10 2 H30 FA 48.7 S1 H5 .....

OPTIONS

MOUNTING POSITION
H1 (Default), **H2**, **H3**, **H4**, **H5**, **H6**

INPUT CONFIGURATION

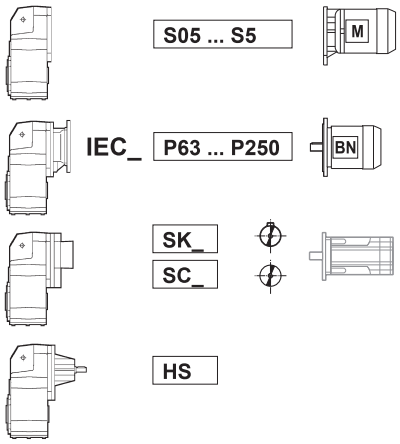

GEAR RATIO

OUTPUT FLANGE SIZE AND POSITION (specify only if requested)
F = Flanged version
A, **B**, **C** = Flange size

VERSION

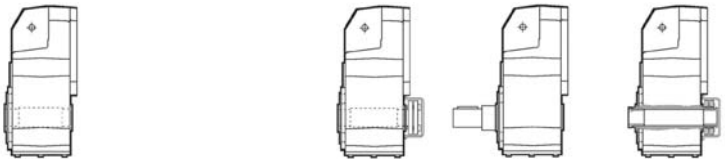

	H									
	F 10	F 20	F 25	F 31	F 41	F 51	F 60	F 70	F 80	F 90
Standard	**H25**	**H30**	**H35**	**H35**	**H40**	**H50**	**H60**	**H80**	**H90**	**H100**
Alternative	H30	H35	H40	H40	H45	H55	H70	H70	H80	H90

S	R	QF
(F 10...F 90)	(F 10...F 90)	(F 10...F 60)

Alternative diameters available on request

REDUCTIONS
2 (F 10...F 51), **3** (F 20...F 90), **4** (F 31...F 90)

GEAR FRAME SIZE
10, **20**, **25**, **31**, **41**, **51**, **60**, **70**, **80**, **90**

TYPE **F** = helical shaft-mounted gear unit

MOTOR | BRAKE

M 1LA 4 230/400-50 IP54 CLF ..... **W FD** 7.5 R SB 220 SA .....

OPTIONS

BRAKE SUPPLY

RECTIFIER TYPE
AC/DC
NB, **SB**, **NBR**, **SBR**

BRAKE HAND RELEASE
R, **RM**

BRAKE TORQUE

BRAKE TYPE
FD (d.c. brake)
FA (a.c. brake)

TERMINAL BOX POSITION
W (default), **N**, **E**, **S**

MOTOR MOUNTING
— (compact motor)
B5 (IEC - motor)

INSULATION CLASS
CL F standard
CL H option

DEGREE OF PROTECTION
IP55 standard (IP54 - brake motor)

VOLTAGE - FREQUENCY

POLE NUMBER
2, **4**, **6**, **2/4**, **2/6**, **2/8**, **2/12**, **4/6**, **4/8**

MOTOR SIZE
0B ... 5LA (compact motor)
63A ... 280M (IEC motor)

MOTOR TYPE
M = compact 3-phase
BN = IEC 3-phase

55.1 Gearbox options

AL, AR

On request the gear unit can be provided complete with a backstop device allowing the output shaft to rotate only in the direction specified at the time of ordering.
The following table shows the gearboxes in which the anti-run back device can be installed.

(D 45)

F 31 2*	**F 41 2** ⛔ (6.7; 10.8)					
F 31 3*	**F 41 3**	**F 51 3**	**F 60 3**	**F 70 3**	**F 80 3**	**F 90 3**
		F 51 4	**F 60 4**	**F 70 4**	**F 80 4**	**F 90 4**

* The supply of the backstop will ban the configuration of servomotor adapters type S_60A, S_ 60B, S_80A.

When ordering the gear unit, the direction of free rotation must be specified through either the AR or the AL option (Table D46).

⚠ N.B. When the anti-run back device operates very frequently make sure that the torque backdriving the gearbox does not exceed 70% of the rated torque M_{n2} for the captioned gear unit.

(D 46)

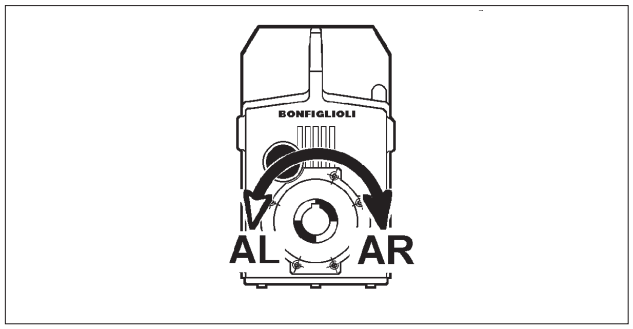

SO

Gear units F 10 through F 41 usually factory filled with oil, to be supplied unlubricated.

LO

Gearboxes F 51 through F 90, usually supplied without oil, to be supplied with synthetic oil currently used by BONFIGLIOLI RIDUTTORI and filled according to the mounting position specified.

DV

Dual oil seals on input shaft. (Only available for integral gearmotors).

VV

Oil seal in Fluoro elastomer compound on input shaft.

PV

Both input and output shafts feature oil seal in Fluoro elastomer compound.

FL

Gear units F 10...F 41 can be side machined and tapped by specifying the FL option.
Mounting dimensions relevant to the FL option are given in the following chart. Gear units type F 51 through F 90 are side machined and tapped as standard.

(D 47)

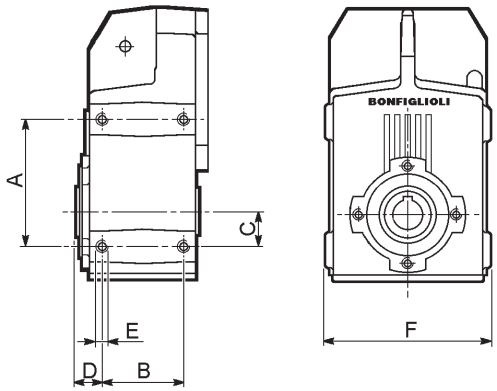

	A	B	C	D	E	F
F 10	115	60	35	21.25	M8x16	163
F 20	130	70	40	26.5	M10x20	181
F 25	130	70	40	27.5	M10x20	181
F 31	147	80	45	30	M12x20	203
F 41	190	95	60	32.5	M12x22	235

SURFACE PROTECTION

When no specific protection class is requested, the painted (ferrous) surfaces of gearboxes are protected to at least corrosivity class C2 (UNI EN ISO 12944-2). For improved resistance to atmospheric corrosion, gearboxes can be delivered with **C3** and **C4** surface protection, obtained by painting the complete gearbox.

(D 48)

SURFACE PROTECTION	Typical environments	Maximum surface temperature	Corrosivity class according to UNI EN ISO 12944-2
C3	Urban and industrial environments with up to 100% relative humidity (medium air pollution)	120°C	C3
C4	Industrial areas, coastal areas, chemical plant, with up to 100% relative humidity (high air pollution)	120°C	C4

Gearboxes with optional protection to class **C3** or **C4** are available in a choice of colours.
If no specific colour is requested (see the “PAINTING” option) gearboxes are finished in RAL 7042.
Gearboxes can also be supplied with surface protection for corrosivity class **C5** according to UNI EN ISO 12944-2. Contact our Technical Service for further details.

PAINTING

Gearboxes with optional protection to class C3 or C4 are available in the colours listed in the following table.

(D 49)

PAINTING	Colour	RAL number
RAL7042*	Traffic Grey A	7042
RAL5010	Gentian Blue	5010
RAL9005	Jet Black	9005
RAL9006	White Aluminium	9006
RAL9010	Pure White	9010

* Gearboxes are supplied in this standard colour if no other colour is specified.

NOTE – “PAINTING” options can only be specified in conjunction with “SURFACE PROTECTION” options.

CERTIFICATES

AC - Certificate of compliance
The document certifies the compliance of the product with the purchase order and the construction in conformity with the applicable procedures of the Bonfiglioli Quality System.

CC - Inspection certificate
The document entails checking on order compliance, the visual inspection of external conditions and of mating dimensions. Checking on main functional parameters in unloaded conditions is also performed along with oil seal proofing, both in static and in running conditions. Units inspected are sampled within the shipping batch and marked individually.

55.2 Accessories

See chapter 65 of this catalogue.

55.3 Motor options

AL, AR

A backstop device on the motor itself, as described in the electric motors section of this catalogue, is available for gearmotors with integral M Series motors. The following table shows the direction of free rotation of the gearbox, on the basis of which the correct option must be selected.

(D 50)

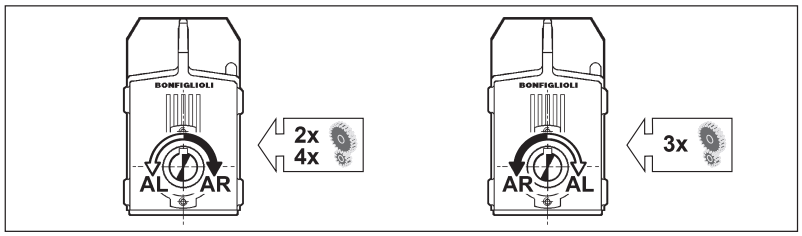

For further information on options, consult the electric motors section.

56 MOUNTING POSITION AND TERMINAL BOX ANGULAR LOCATION

Location of motor terminal box can be specified by viewing the motor from the fan side; standard location is shown in black (W).

Angular location of the brake release lever.

Unless otherwise specified, brake motors have the manual device side located, 90° apart from terminal box. Different angles can be specified through the relevant options available.

(D 51)

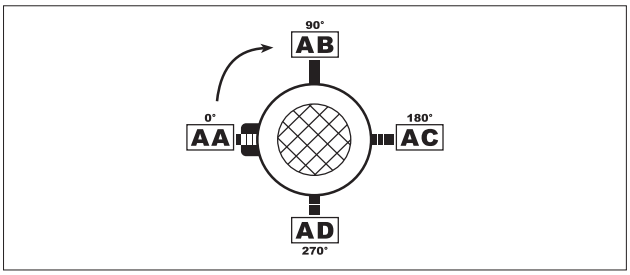

F ...

H1

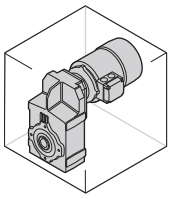

_S

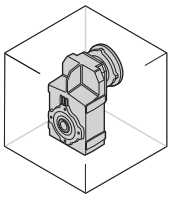

_P(IEC) _SK / _SC

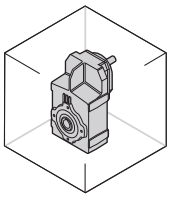

_HS

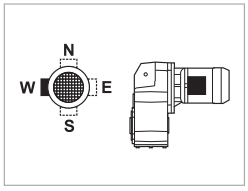

H2

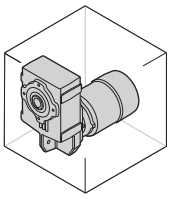

_S

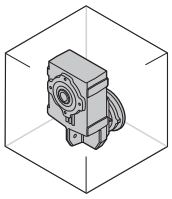

_P(IEC) _SK / _SC

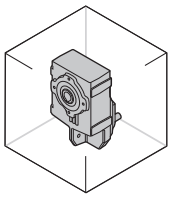

_HS

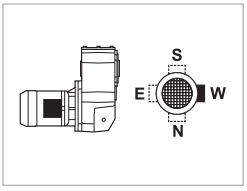

H3

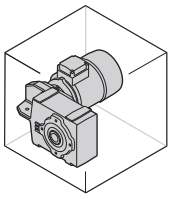

_S

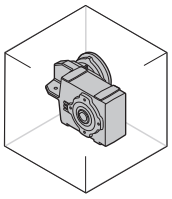

_P(IEC) _SK / _SC

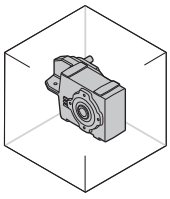

_HS

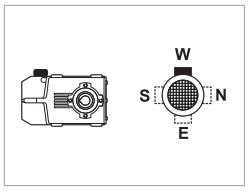

H4

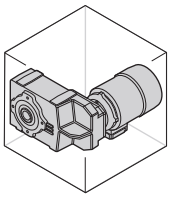

_S

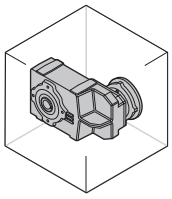

_P(IEC) _SK / _SC

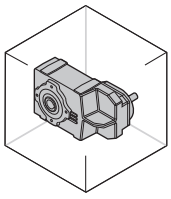

_HS

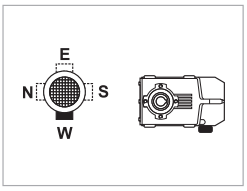

H5

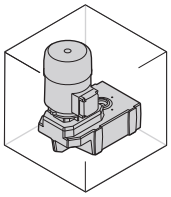

_S

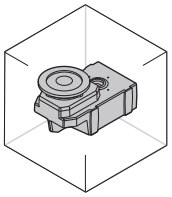

_P(IEC) _SK / _SC

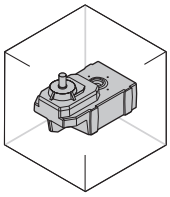

_HS

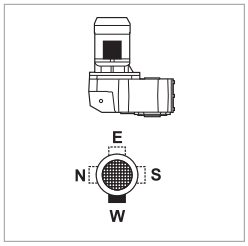

H6

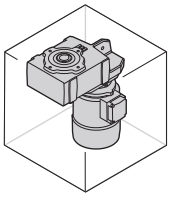

_S

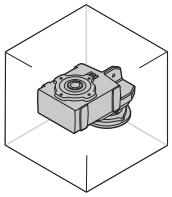

_P(IEC) _SK / _SC

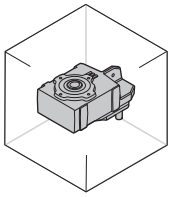

_HS

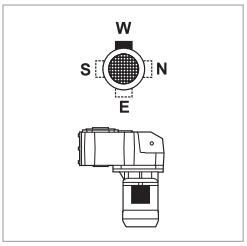

W = Default

57 OVERHUNG LOADS

External transmissions keyed onto input and/or output shaft generate loads that act radially onto same shaft.
Resulting shaft loading must be compatible with both the bearing and the shaft capacity. Namely shaft loading (R_{c1} for input shaft, R_{c2} for output shaft), must be equal or lower than admissible overhung load capacity for shaft under study (R_{n1} for input shaft, R_{n2} for output shaft). OHL capability listed in the rating chart section.
In the formulas given below, index (1) applies to parameters relating to input shaft, whereas index (2) refers to output shaft.
The load generated by an external transmission can be calculated with close approximation by the following equations:

$$R_{c1}[N] = \frac{2000 \cdot M_1[Nm] \cdot K_r}{d\,[mm]} \quad ; \quad R_{c2}[N] = \frac{2000 \cdot M_2[Nm] \cdot K_r}{d\,[mm]} \qquad (35)$$

(D 52)

M_1 [Nm]	Torque applied to input shaft
M_2 [Nm]	Torque drawn at output shaft
d [mm]	Pitch diameter of element keyed onto shaft
K_r = 1	Chain transmission

K_r = 1,25	Gear transmission
K_r = 1,5	V-belt transmission
K_r = 2,0	Flat belt transmission

Verification of OHL capability varies depending on whether load applies at midpoint of shaft or it is shifted further out:

(D 53)

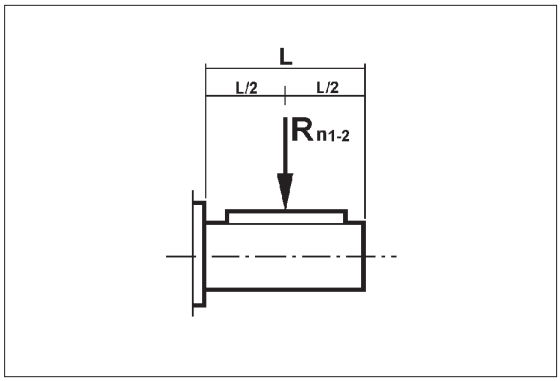

(D 54)

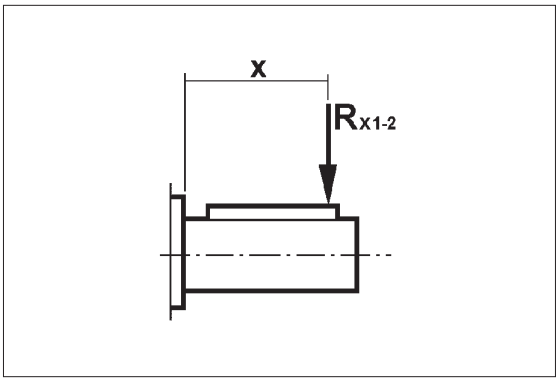

a) Load applied at midpoint of shaft, tab. (D53)

A comparison of shaft loading with catalogue OHL ratings should verify the following condition:

Rc1 ≤ Rn1 [input shaft]

or

Rc2 ≤ Rn2 [output shaft]

b) Load off the midpoint tab. (D54)

When load is shifted at an “x” distance from shaft shoulder, permissible load must be calculated for that distance.
Revised permissible overhung loads Rx1 (input) and Rx2 (output) are calculated respectively from original rated values Rn1 and Rn2 through factor:

$$\frac{a}{b+x} \qquad (36)$$

(D 55)

	Load location factors					
	Output shaft			Input shaft		
	a	**b**	**c**	**a**	**b**	**c**
F 10 2	123	100.5	450	21	1	300
F 20 2	145	115	600	40	20	350
F 20 3	145	115	600	21	1	300
F 25 2 - F 25 3	157.5	127.5	800	40	20	350
F 25 4	157.5	127.5	800	21	1	300
F 31 2 - F 31 3	165	135	850	38.5	18.5	350
F 31 4	165	135	850	21	1	300
F 41 2 - F 41 3	191.5	151.5	1000	49.5	24.5	450
F 41 4	191.5	151.5	1000	40	20	350
F 51 2 - F 51 3	233.5	183.5	1300	49.5	24.5	450
F 51 4	233.5	183.5	1300	38.5	18.5	350
F 60 3	258.5	198.5	1100	55.5	25.5	600
F 60 4	258.5	198.5	1100	49.5	24.5	450
F 70 3	342	277	1600	86	31	1000
F 70 4	342	277	1600	49.5	24.5	450
F 80 3	386.5	301.5	1800	86	31	1000
F 80 4	386.5	301.5	1800	49.5	24.5	450
F 90 3	458.5	353.5	2400	116	46	1400
F 90 4	458.5	353.5	2400	49.5	24.5	450

Verification procedure is described here after.

INPUT SHAFT

1. Calculate:

$$R_{x1} = R_{n1} \cdot \frac{a}{b + x} \tag{37}$$

N.B. Subject to condition:

$$\frac{L}{2} \leq x \leq c \tag{38}$$

Finally, the following condition must be verified:

$$R_{c1} \leq R_{x1} \tag{39}$$

OUTPUT SHAFT

1. Calculate:

$$R_{x2} = R_{n2} \cdot \frac{a}{b + x} \tag{40}$$

N.B. Subject to condition:

$$\frac{L}{2} \leq x \leq c \tag{41}$$

Finally, the following condition must be verified:

$$R_{c2} \leq R_{x2} \tag{42}$$

58 THRUST LOADS, A_{n1}, A_{n2}

Permissible thrust loads on input [A_{n1}] and output [A_{n2}] shafts are obtained from the radial loading for the shaft under consideration [R_{n1}] and [R_{n2}] through the following equation:

$$A_{n1} = R_{n1} \cdot 0.2$$
$$A_{n2} = R_{n2} \cdot 0.2 \qquad (43)$$

The thrust loads calculated through these formulas apply to thrust forces occurring at the same time as rated radial loads.
In the only case that no overhung load acts on the shaft the value of the admissible thrust load [A_n] amounts to 50% of rated OHL [R_n] on same shaft.
Where thrust loads exceed permissible value or largely prevail over radial loads, contact Bonfiglioli Riduttori for an in-depth analysis of the application.

0.09 kW

n_2 min-1	M_2 Nm	S	i	R_{n2} N			IEC	
0.40	1945	2.6	2188	35000			**F704_2188 P63 BN63A6**	453
0.50	1526	3.4	1717	35000			**F704_1717 P63 BN63A6**	453
0.62	1254	0.9	1411	8500	**F414_1411 S05 M05A6**	440	**F414_1411 P63 BN63A6**	441
0.73	1079	1.0	1213	8500	**F414_1213 S05 M05A6**	440	**F414_1213 P63 BN63A6**	441
0.81	971	1.1	1092	8500	**F414_1092 S05 M05A6**	440	**F414_1092 P63 BN63A6**	441
0.90	874	1.3	982.4	8500	**F414_982.4 S05 M05A6**	440	**F414_982.4 P63 BN63A6**	441
0.98	801	1.4	900.5	8500	**F414_900.5 S05 M05A6**	440	**F414_900.5 P63 BN63A6**	441
1.1	724	1.5	813.8	8500	**F414_813.8 S05 M05A6**	440	**F414_813.8 P63 BN63A6**	441
1.2	678	0.9	762.3	6500	**F314_762.3 S05 M05A6**	436	**F314_762.3 P63 BN63A6**	437
1.2	658	1.7	739.4	8500	**F414_739.4 S05 M05A6**	440	**F414_739.4 P63 BN63A6**	441
1.3	610	1.0	685.6	6500	**F314_685.6 S05 M05A6**	436	**F314_685.6 P63 BN63A6**	437
1.3	614	1.8	690.1	8500	**F414_690.1 S05 M05A6**	440	**F414_690.1 P63 BN63A6**	441
1.4	551	1.1	619.9	6500	**F314_619.9 S05 M05A6**	436	**F314_619.9 P63 BN63A6**	437
1.5	515	1.2	578.6	6500	**F314_578.6 S05 M05A6**	436	**F314_578.6 P63 BN63A6**	437
1.6	489	2.2	549.8	8500	**F414_549.8 S05 M05A6**	440	**F414_549.8 P63 BN63A6**	441
1.7	469	0.9	527.3	6500	**F254_527.3 S05 M05A6**	432	**F254_527.3 P63 BN63A6**	433
1.7	469	1.3	527.8	6500	**F314_527.8 S05 M05A6**	436	**F314_527.8 P63 BN63A6**	437
1.9	414	1.0	466.0	6500	**F254_466.0 S05 M05A6**	432	**F254_466.0 P63 BN63A6**	433
1.9	411	1.5	462.6	6500	**F314_462.6 S05 M05A6**	436	**F314_462.6 P63 BN63A6**	437
2.0	387	1.0	434.9	6500	**F254_434.9 S05 M05A6**	432	**F254_434.9 P63 BN63A6**	433
2.0	386	2.9	433.7	8500	**F414_433.7 S05 M05A6**	440	**F414_433.7 P63 BN63A6**	441
2.1	372	1.6	418.9	6500	**F314_418.9 S05 M05A6**	436	**F314_418.9 P63 BN63A6**	437
2.2	350	1.1	393.9	6500	**F254_393.9 S05 M05A6**	432	**F254_393.9 P63 BN63A6**	433
2.4	340	1.8	374.4	6500			**F313_374.4 P63 BN63A6**	437
2.6	302	2.0	332.8	6500			**F313_332.8 P63 BN63A6**	437
2.6	313	3.5	344.8	8500			**F413_344.8 P63 BN63A6**	441
2.8	288	0.9	316.9	4000	**F203_316.9 S05 M05A6**	428	**F203_316.9 P63 BN63A6**	429
3.0	267	2.2	293.8	6500			**F313_293.8 P63 BN63A6**	437
3.1	259	1.0	285.2	4000	**F203_285.2 S05 M05A6**	428	**F203_285.2 P63 BN63A6**	429
3.4	232	1.1	255.3	4000	**F203_255.3 S05 M05A6**	428	**F203_255.3 P63 BN63A6**	429
3.5	230	2.6	253.6	6500			**F313_253.6 P63 BN63A6**	437
3.9	207	2.9	228.2	6500			**F313_228.2 P63 BN63A6**	437
4.2	190	1.3	209.3	4000	**F203_209.3 S05 M05A6**	428	**F203_209.3 P63 BN63A6**	429
4.4	184	3.3	202.3	6500			**F313_202.3 P63 BN63A6**	437
4.8	168	1.5	184.9	4000	**F203_184.9 S05 M05A6**	428	**F203_184.9 P63 BN63A6**	429
5.1	157	1.6	172.6	4000	**F203_172.6 S05 M05A6**	428	**F203_172.6 P63 BN63A6**	429
5.6	142	1.8	156.3	4000	**F203_156.3 S05 M05A6**	428	**F203_156.3 P63 BN63A6**	429
6.7	123	2.0	132.2	4000	**F202_132.2 S05 M05A6**	428	**F202_132.2 P63 BN63A6**	429
6.9	118	1.2	127.1	2800	**F102_127.1 S05 M05A6**	424	**F102_127.1 P63 BN63A6**	425
7.7	106	2.4	114.3	4000	**F202_114.3 S05 M05A6**	428	**F202_114.3 P63 BN63A6**	429
8.3	98	1.4	106.0	2800	**F102_106.0 S05 M05A6**	424	**F102_106.0 P63 BN63A6**	425
8.7	94	2.6	101.6	4000	**F202_101.6 S05 M05A6**	428	**F202_101.6 P63 BN63A6**	429
9.6	85	1.6	91.5	2800	**F102_91.5 S05 M05A6**	424	**F102_91.5 P63 BN63A6**	425
9.7	84	3.0	90.4	4000	**F202_90.4 S05 M05A6**	428	**F202_90.4 P63 BN63A6**	429
10.8	75	1.9	81.3	2800	**F102_81.3 S05 M05A6**	424	**F102_81.3 P63 BN63A6**	425
11.5	71	3.5	76.8	4000	**F202_76.8 S05 M05A6**	428	**F202_76.8 P63 BN63A6**	429
12.4	66	2.1	71.1	2800	**F102_71.1 S05 M05A6**	424	**F102_71.1 P63 BN63A6**	425
14.0	58	2.4	63.0	2800	**F102_63.0 S05 M05A6**	424	**F102_63.0 P63 BN63A6**	425

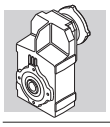

0.09 kW

n_2 min-1	M_2 Nm	S	i	R_{n2} N			IEC	
15.5	53	2.7	56.7	2800	**F102_56.7 S05 M05A6**	424	**F102_56.7 P63 BN63A6**	425
18.1	45	3.1	48.7	2800	**F102_48.7 S05 M05A6**	424	**F102_48.7 P63 BN63A6**	425
19.7	41	3.4	44.7	2800	**F102_44.7 S05 M05A6**	424	**F102_44.7 P63 BN63A6**	425
22.2	37	3.8	39.6	2800	**F102_39.6 S05 M05A6**	424	**F102_39.6 P63 BN63A6**	425
24.9	33	4.3	35.3	2800	**F102_35.3 S05 M05A6**	424	**F102_35.3 P63 BN63A6**	425
26.7	31	4.6	33.0	2800	**F102_33.0 S05 M05A6**	424	**F102_33.0 P63 BN63A6**	425
29.7	28	5.1	29.6	2800	**F102_29.6 S05 M05A6**	424	**F102_29.6 P63 BN63A6**	425
34	24	5.9	25.8	2800	**F102_25.8 S05 M05A6**	424	**F102_25.8 P63 BN63A6**	425
39	21	6.6	22.8	2800	**F102_22.8 S05 M05A6**	424	**F102_22.8 P63 BN63A6**	425
46	18	7.8	19.3	2800	**F102_19.3 S05 M05A6**	424	**F102_19.3 P63 BN63A6**	425
52	16	8.9	17.0	2800	**F102_17.0 S05 M05A6**	424	**F102_17.0 P63 BN63A6**	425
60	14	10.1	14.6	2700	**F102_14.6 S05 M05A6**	424	**F102_14.6 P63 BN63A6**	425
68	12	10.3	13.0	2600	**F102_13.0 S05 M05A6**	424	**F102_13.0 P63 BN63A6**	425
76	11	10.3	11.5	2500	**F102_11.5 S05 M05A6**	424	**F102_11.5 P63 BN63A6**	425
90	9	11.8	9.8	2370	**F102_9.8 S05 M05A6**	424	**F102_9.8 P63 BN63A6**	425
103	8	11.8	8.6	2270	**F102_8.6 S05 M05A6**	424	**F102_8.6 P63 BN63A6**	425
119	7	13.2	7.4	2160	**F102_7.4 S05 M05A6**	424	**F102_7.4 P63 BN63A6**	425

0.12 kW

n_2 min-1	M_2 Nm	S	i	R_{n2} N			IEC	
0.40	2623	1.9	2188	35000			**F704_2188 P63 BN63B6**	453
0.51	2058	2.5	1717	35000			**F704_1717 P63 BN63B6**	453
0.60	1742	2.9	2188	35000			**F704_2188 P63 BN63A4**	453
0.65	1607	3.1	2019	35000			**F704_2019 P63 BN63A4**	453
0.76	1368	2.1	1141	20000			**F604_1141 P63 BN63B6**	449
0.89	1178	0.9	982.4	8500	**F414_982.4 S05 M05B6**	440	**F414_982.4 P63 BN63B6**	441
0.96	1090	1.0	1411	8500	**F414_1411 S05 M05A4**	440	**F414_1411 P63 BN63A4**	441
1.1	938	1.2	1213	8500	**F414_1213 S05 M05A4**	440	**F414_1213 P63 BN63A4**	441
1.2	844	1.3	1092	8500	**F414_1092 S05 M05A4**	440	**F414_1092 P63 BN63A4**	441
1.4	759	1.4	982.4	8500	**F414_982.4 S05 M05A4**	440	**F414_982.4 P63 BN63A4**	441
1.5	696	1.6	900.5	8500	**F414_900.5 S05 M05A4**	440	**F414_900.5 P63 BN63A4**	441
1.6	643	0.9	831.6	6500	**F314_831.6 S05 M05A4**	436	**F314_831.6 P63 BN63A4**	437
1.7	629	1.7	813.8	8500	**F414_813.8 S05 M05A4**	440	**F414_813.8 P63 BN63A4**	441
1.8	589	1.0	762.3	6500	**F314_762.3 S05 M05A4**	436	**F314_762.3 P63 BN63A4**	437
1.8	571	1.9	739.4	8500	**F414_739.4 S05 M05A4**	440	**F414_739.4 P63 BN63A4**	441
2.0	530	1.1	685.6	6500	**F314_685.6 S05 M05A4**	436	**F314_685.6 P63 BN63A4**	437
2.0	533	2.1	690.1	8500	**F414_690.1 S05 M05A4**	440	**F414_690.1 P63 BN63A4**	441
2.2	479	1.3	619.9	6500	**F314_619.9 S05 M05A4**	436	**F314_619.9 P63 BN63A4**	437
2.3	456	0.9	589.7	6500	**F254_589.7 S05 M05A4**	432	**F254_589.7 P63 BN63A4**	433
2.3	447	1.3	578.6	6500	**F314_578.6 S05 M05A4**	436	**F314_578.6 P63 BN63A4**	437
2.5	425	2.6	549.8	8500	**F414_549.8 S05 M05A4**	440	**F414_549.8 P63 BN63A4**	441
2.6	408	1.0	527.3	6500	**F254_527.3 S05 M05A4**	432	**F254_527.3 P63 BN63A4**	433
2.6	408	1.5	527.8	6500	**F314_527.8 S05 M05A4**	436	**F314_527.8 P63 BN63A4**	437
2.9	360	1.1	466.0	6500	**F254_466.0 S05 M05A4**	432	**F254_466.0 P63 BN63A4**	433
2.9	358	1.7	462.6	6500	**F314_462.6 S05 M05A4**	436	**F314_462.6 P63 BN63A4**	437
3.1	336	1.2	434.9	6500	**F254_434.9 S05 M05A4**	432	**F254_434.9 P63 BN63A4**	433
3.1	335	3.3	433.7	8500	**F414_433.7 S05 M05A4**	440	**F414_433.7 P63 BN63A4**	441

0.12 kW

n_2 min-1	M_2 Nm	S	i	R_{n2} N			IEC	
3.2	324	1.9	418.9	6500	**F314_418.9 S05 M05A4**	436	**F314_418.9 P63 BN63A4**	437
3.4	304	1.3	393.9	6500	**F254_393.9 S05 M05A4**	432	**F254_393.9 P63 BN63A4**	433
3.6	296	2.0	374.4	6500			**F313_374.4 P63 BN63A4**	437
4.1	263	1.5	333.1	6500	**F253_333.1 S05 M05A4**	432	**F253_333.1 P63 BN63A4**	433
4.1	263	2.3	332.8	6500			**F313_332.8 P63 BN63A4**	437
4.3	250	1.0	316.9	4000	**F203_316.9 S05 M05A4**	428	**F203_316.9 P63 BN63A4**	429
4.6	232	2.6	293.8	6500			**F313_293.8 P63 BN63A4**	437
4.7	225	1.1	285.2	4000	**F203_285.2 S05 M05A4**	428	**F203_285.2 P63 BN63A4**	429
4.7	228	1.8	288.1	6500	**F253_288.1 S05 M05A4**	432	**F253_288.1 P63 BN63A4**	433
5.3	202	1.2	255.3	4000	**F203_255.3 S05 M05A4**	428	**F203_255.3 P63 BN63A4**	429
5.3	202	2.0	256.1	6500	**F253_256.1 S05 M05A4**	432	**F253_256.1 P63 BN63A4**	433
5.3	200	3.0	253.6	6500			**F313_253.6 P63 BN63A4**	437
5.9	180	2.2	227.8	6500	**F253_227.8 S05 M05A4**	432	**F253_227.8 P63 BN63A4**	433
5.9	180	3.3	228.2	6500			**F313_228.2 P63 BN63A4**	437
6.5	165	1.5	209.3	4000	**F203_209.3 S05 M05A4**	428	**F203_209.3 P63 BN63A4**	429
7.0	153	2.6	193.6	6500	**F253_193.6 S05 M05A4**	432	**F253_193.6 P63 BN63A4**	433
7.3	146	1.7	184.9	4000	**F203_184.9 S05 M05A4**	428	**F203_184.9 P63 BN63A4**	429
7.7	138	2.9	174.2	6500	**F253_174.2 S05 M05A4**	432	**F253_174.2 P63 BN63A4**	433
7.8	136	1.8	172.6	4000	**F203_172.6 S05 M05A4**	428	**F203_172.6 P63 BN63A4**	429
8.6	123	2.0	156.3	4000	**F203_156.3 S05 M05A4**	428	**F203_156.3 P63 BN63A4**	429
8.7	123	3.2	155.9	6500	**F253_155.9 S05 M05A4**	432	**F253_155.9 P63 BN63A4**	433
9.4	113	3.5	143.0	6500	**F253_143.0 S05 M05A4**	432	**F253_143.0 P63 BN63A4**	433
10.2	107	2.3	132.2	4000	**F202_132.2 S05 M05A4**	428	**F202_132.2 P63 BN63A4**	429
10.6	103	1.4	127.1	2800	**F102_127.1 S05 M05A4**	424	**F102_127.1 P63 BN63A4**	425
11.8	92	2.7	114.3	4000	**F202_114.3 S05 M05A4**	428	**F202_114.3 P63 BN63A4**	429
12.7	86	1.6	106.0	2800	**F102_106.0 S05 M05A4**	424	**F102_106.0 P63 BN63A4**	425
13.3	82	3.0	101.6	4000	**F202_101.6 S05 M05A4**	428	**F202_101.6 P63 BN63A4**	429
14.8	74	1.9	91.5	2800	**F102_91.5 S05 M05A4**	424	**F102_91.5 P63 BN63A4**	425
14.9	73	3.4	90.4	4000	**F202_90.4 S05 M05A4**	428	**F202_90.4 P63 BN63A4**	429
16.6	66	2.1	81.3	2800	**F102_81.3 S05 M05A4**	424	**F102_81.3 P63 BN63A4**	425
19.0	57	2.4	71.1	2800	**F102_71.1 S05 M05A4**	424	**F102_71.1 P63 BN63A4**	425
21.4	51	2.8	63.0	2800	**F102_63.0 S05 M05A4**	424	**F102_63.0 P63 BN63A4**	425
23.8	46	3.1	56.7	2800	**F102_56.7 S05 M05A4**	424	**F102_56.7 P63 BN63A4**	425
27.7	39	3.6	48.7	2800	**F102_48.7 S05 M05A4**	424	**F102_48.7 P63 BN63A4**	425
30	36	3.9	44.7	2800	**F102_44.7 S05 M05A4**	424	**F102_44.7 P63 BN63A4**	425
34	32	4.4	39.6	2800	**F102_39.6 S05 M05A4**	424	**F102_39.6 P63 BN63A4**	425
38	29	4.9	35.3	2800	**F102_35.3 S05 M05A4**	424	**F102_35.3 P63 BN63A4**	425
41	27	5.3	33	2800	**F102_33.0 S05 M05A4**	424	**F102_33.0 P63 BN63A4**	425
46	24	5.9	29.6	2800	**F102_29.6 S05 M05A4**	424	**F102_29.6 P63 BN63A4**	425
52	21	6.7	25.8	2800	**F102_25.8 S05 M05A4**	424	**F102_25.8 P63 BN63A4**	425
59	18	7.6	22.8	2700	**F102_22.8 S05 M05A4**	424	**F102_22.8 P63 BN63A4**	425
70	16	8.7	19.3	2560	**F102_19.3 S05 M05A4**	424	**F102_19.3 P63 BN63A4**	425
80	14	9.3	17.0	2450	**F102_17.0 S05 M05A4**	424	**F102_17.0 P63 BN63A4**	425
92	12	10.1	14.6	2340	**F102_14.6 S05 M05A4**	424	**F102_14.6 P63 BN63A4**	425
104	11	9.9	13.0	2250	**F102_13.0 S05 M05A4**	424	**F102_13.0 P63 BN63A4**	425
117	9	10.3	11.5	2160	**F102_11.5 S05 M05A4**	424	**F102_11.5 P63 BN63A4**	425
138	8	11.3	9.8	2050	**F102_9.8 S05 M05A4**	424	**F102_9.8 P63 BN63A4**	425
157	7	11.8	8.6	1970	**F102_8.6 S05 M05A4**	424	**F102_8.6 P63 BN63A4**	425
182	6	12.7	7.4	1870	**F102_7.4 S05 M05A4**	424	**F102_7.4 P63 BN63A4**	425

0.18 kW

n_2 min-1	M_2 Nm	S	i	R_{n2} N			IEC	
0.41	3804	1.3	2188	35000	**F704_2188 S1 M1SC6**	452	**F704_2188 P71 BN71A6**	453
0.45	3511	1.4	2019	35000	**F704_2019 S1 M1SC6**	452	**F704_2019 P71 BN71A6**	453
0.45	3455	2.3	1987	45000	**F804_1987 S1 M1SC6**	455	**F804_1987 P71 BN71A6**	456
0.49	3189	2.5	1834	45000	**F804_1834 S1 M1SC6**	455	**F804_1834 P71 BN71A6**	456
0.52	2985	1.7	1717	35000	**F704_1717 S1 M1SC6**	452	**F704_1717 P71 BN71A6**	453
0.53	2972	2.7	1709	45000	**F804_1709 S1 M1SC6**	455	**F804_1709 P71 BN71A6**	456
0.57	2756	1.8	1585	35000	**F704_1585 S1 M1SC6**	452	**F704_1585 P71 BN71A6**	453
0.57	2744	2.9	1578	45000	**F804_1578 S1 M1SC6**	455	**F804_1578 P71 BN71A6**	456
0.61	2576	1.9	1481	35000	**F704_1481 S1 M1SC6**	452	**F704_1481 P71 BN71A6**	453
0.65	2406	3.3	1384	45000	**F804_1384 S1 M1SC6**	455	**F804_1384 P71 BN71A6**	456
0.66	2378	2.1	1368	35000	**F704_1368 S1 M1SC6**	452	**F704_1368 P71 BN71A6**	453
0.76	2055	2.4	1182	35000	**F704_1182 S1 M1SC6**	452	**F704_1182 P71 BN71A6**	453
0.77	2030	0.9	1168	12000	**F514_1168 S1 M1SC6**	444	**F514_1168 P71 BN71A6**	445
0.79	1985	1.5	1141	20000	**F604_1141 S1 M1SC6**	448	**F604_1141 P71 BN71A6**	449
0.83	1897	2.6	1091	35000	**F704_1091 S1 M1SC6**	452	**F704_1091 P71 BN71A6**	453
0.84	1861	1.0	1070	12000	**F514_1070 S1 M1SC6**	444	**F514_1070 P71 BN71A6**	445
0.85	1832	1.6	1054	20000	**F604_1054 S1 M1SC6**	448	**F604_1054 P71 BN71A6**	449
0.92	1703	1.1	979.4	12000	**F514_979.4 S1 M1SC6**	444	**F514_979.4 P71 BN71A6**	445
0.92	1694	3.0	974.4	35000	**F704_974.4 S1 M1SC6**	452	**F704_974.4 P71 BN71A6**	453
0.94	1667	1.7	958.9	20000	**F604_958.9 S1 M1SC6**	448	**F604_958.9 P71 BN71A6**	449
1.0	1540	1.2	885.5	12000	**F514_885.5 S1 M1SC6**	444	**F514_885.5 P71 BN71A6**	445
1.0	1539	1.9	885.1	20000	**F604_885.1 S1 M1SC6**	448	**F604_885.1 P71 BN71A6**	449
1.0	1564	3.2	899.4	35000	**F704_899.4 S1 M1SC6**	452	**F704_899.4 P71 BN71A6**	453
1.1	1437	1.3	826.4	12000	**F514_826.4 S1 M1SC6**	444	**F514_826.4 P71 BN71A6**	445
1.1	1430	3.5	822.2	35000	**F704_822.2 S1 M1SC6**	452	**F704_822.2 P71 BN71A6**	453
1.2	1286	0.9	739.4	8500	**F414_739.4 S1 M1SC6**	440	**F414_739.4 P71 BN71A6**	441
1.2	1286	0.9	739.4	8500	**F414_739.4 S1 M1SC6**	440	**F414_739.4 P71 BN71A6**	441
1.3	1200	0.9	690.1	8500	**F414_690.1 S1 M1SC6**	440	**F414_690.1 P71 BN71A6**	441
1.3	1200	0.9	690.1	8500	**F414_690.1 S1 M1SC6**	440	**F414_690.1 P71 BN71A6**	441
1.3	1165	0.9	982.4	8500	**F414_982.4 S05 M05B4**	440	**F414_982.4 P63 BN63B4**	441
1.5	1068	1.0	900.5	8500	**F414_900.5 S05 M05B4**	440	**F414_900.5 P63 BN63B4**	441
1.6	965	1.1	813.8	8500	**F414_813.8 S05 M05B4**	440	**F414_813.8 P63 BN63B4**	441
1.8	877	1.3	739.4	8500	**F414_739.4 S05 M05B4**	440	**F414_739.4 P63 BN63B4**	441
1.9	818	1.3	690.1	8500	**F414_690.1 S05 M05B4**	440	**F414_690.1 P63 BN63B4**	441
2.3	686	0.9	578.6	6500	**F314_578.6 S05 M05B4**	436	**F314_578.6 P63 BN63B4**	437
2.4	652	1.7	549.8	8500	**F414_549.8 S05 M05B4**	440	**F414_549.8 P63 BN63B4**	441
2.5	626	1.0	527.8	6500	**F314_527.8 S05 M05B4**	436	**F314_527.8 P63 BN63B4**	437
2.9	549	1.1	462.6	6500	**F314_462.6 S05 M05B4**	436	**F314_462.6 P63 BN63B4**	437
3.0	514	2.1	433.7	8500	**F414_433.7 S05 M05B4**	440	**F414_433.7 P63 BN63B4**	441
3.2	497	1.2	418.9	6500	**F314_418.9 S05 M05B4**	436	**F314_418.9 P63 BN63B4**	437
3.4	467	0.9	393.9	6500	**F254_393.9 S05 M05B4**	432	**F254_393.9 P63 BN63B4**	433
3.5	454	1.3	374.4	6500			**F313_374.4 P63 BN63B4**	437
3.8	418	2.6	344.8	8500			**F413_344.8 P63 BN63B4**	441
4.0	404	1.0	333.1	6500	**F253_333.1 S05 M05B4**	432	**F253_333.1 P63 BN63B4**	433
4.0	403	1.5	332.8	6500			**F313_332.8 P63 BN63B4**	437
4.5	356	1.7	293.8	6500			**F313_293.8 P63 BN63B4**	437
4.5	359	3.1	296.6	8500			**F413_296.6 P63 BN63B4**	441
4.6	349	1.1	288.1	6500	**F253_288.1 S05 M05B4**	432	**F253_288.1 P63 BN63B4**	433
4.9	323	3.4	266.9	8500			**F413_266.9 P63 BN63B4**	441
5.2	310	1.3	256.1	6500	**F253_256.1 S05 M05B4**	432	**F253_256.1 P63 BN63B4**	433
5.2	307	2.0	253.6	6500			**F313_253.6 P63 BN63B4**	437

0.18 kW

n_2 min-1	M_2 Nm	S	i	R_{n2} N			IEC	
5.8	276	1.4	227.8	6500	**F253_227.8 S05 M05B4**	432	**F253_227.8 P63 BN63B4**	433
5.8	277	2.2	228.2	6500			**F313_228.2 P63 BN63B4**	437
6.3	254	1.0	209.3	4000	**F203_209.3 S05 M05B4**	428	**F203_209.3 P63 BN63B4**	429
6.5	245	2.4	202.3	6500			**F313_202.3 P63 BN63B4**	437
6.8	235	1.7	193.6	6500	**F253_193.6 S05 M05B4**	432	**F253_193.6 P63 BN63B4**	433
7.1	224	1.1	184.9	4000	**F203_184.9 S05 M05B4**	428	**F203_184.9 P63 BN63B4**	429
7.1	225	2.7	185.4	6500			**F313_185.4 P63 BN63B4**	437
7.6	209	1.2	172.6	4000	**F203_172.6 S05 M05B4**	428	**F203_172.6 P63 BN63B4**	429
7.6	211	1.9	174.2	6500	**F253_174.2 S05 M05B4**	432	**F253_174.2 P63 BN63B4**	433
7.9	202	3.0	166.8	6500			**F313_166.8 P63 BN63B4**	437
8.4	189	1.3	156.3	4000	**F203_156.3 S05 M05B4**	428	**F203_156.3 P63 BN63B4**	429
8.5	189	2.1	155.9	6500	**F253_155.9 S05 M05B4**	432	**F253_155.9 P63 BN63B4**	433
8.8	183	3.3	150.8	6500			**F313_150.8 P63 BN63B4**	437
9.2	173	2.3	143.0	6500	**F253_143.0 S05 M05B4**	432	**F253_143.0 P63 BN63B4**	433
9.4	171	3.5	140.7	6500			**F313_140.7 P63 BN63B4**	437
10.0	164	1.5	132.2	4000	**F202_132.2 S05 M05B4**	428	**F202_132.2 P63 BN63B4**	429
10.3	155	2.6	127.8	6500	**F253_127.8 S05 M05B4**	432	**F253_127.8 P63 BN63B4**	433
10.4	157	0.9	127.1	2800	**F102_127.1 S05 M05B4**	424	**F102_127.1 P63 BN63B4**	425
11.5	142	1.8	114.3	4000	**F202_114.3 S05 M05B4**	428	**F202_114.3 P63 BN63B4**	429
11.7	137	2.9	113.0	6500	**F253_113.0 S05 M05B4**	432	**F253_113.0 P63 BN63B4**	433
12.5	131	1.1	106.0	2800	**F102_106.0 S05 M05B4**	424	**F102_106.0 P63 BN63B4**	425
12.5	128	3.1	105.4	6500	**F253_105.4 S05 M05B4**	432	**F253_105.4 P63 BN63B4**	433
13.0	126	2.0	101.6	4000	**F202_101.6 S05 M05B4**	428	**F202_101.6 P63 BN63B4**	429
13.8	116	3.5	95.5	6500	**F253_95.5 S05 M05B4**	432	**F253_95.5 P63 BN63B4**	433
14.4	113	1.2	91.5	2800	**F102_91.5 S05 M05B4**	424	**F102_91.5 P63 BN63B4**	425
14.6	112	2.2	90.4	4000	**F202_90.4 S05 M05B4**	428	**F202_90.4 P63 BN63B4**	429
16.2	101	1.4	81.3	2800	**F102_81.3 S05 M05B4**	424	**F102_81.3 P63 BN63B4**	425
17.2	95	2.6	76.8	4000	**F202_76.8 S05 M05B4**	428	**F202_76.8 P63 BN63B4**	429
18.6	88	1.6	71.1	2800	**F102_71.1 S05 M05B4**	424	**F102_71.1 P63 BN63B4**	425
19.1	86	2.9	69.1	4000	**F202_69.1 S05 M05B4**	428	**F202_69.1 P63 BN63B4**	429
21.0	78	1.8	63.0	2800	**F102_63.0 S05 M05B4**	424	**F102_63.0 P63 BN63B4**	425
21.3	77	3.3	61.9	4000	**F202_61.9 S05 M05B4**	428	**F202_61.9 P63 BN63B4**	429
23.3	70	2.0	56.7	2800	**F102_56.7 S05 M05B4**	424	**F102_56.7 P63 BN63B4**	425
27.1	60	2.3	48.7	2800	**F102_48.7 S05 M05B4**	424	**F102_48.7 P63 BN63B4**	425
29.6	55	2.5	44.7	2800	**F102_44.7 S05 M05B4**	424	**F102_44.7 P63 BN63B4**	425
33	49	2.9	39.6	2800	**F102_39.6 S05 M05B4**	424	**F102_39.6 P63 BN63B4**	425
37	44	3.2	35.3	2800	**F102_35.3 S05 M05B4**	424	**F102_35.3 P63 BN63B4**	425
40	41	3.4	33.0	2800	**F102_33.0 S05 M05B4**	424	**F102_33.0 P63 BN63B4**	425
45	37	3.8	29.6	2800	**F102_29.6 S05 M05B4**	424	**F102_29.6 P63 BN63B4**	425
51	32	4.4	25.8	2780	**F102_25.8 S05 M05B4**	424	**F102_25.8 P63 BN63B4**	425
58	28	5.0	22.8	2680	**F102_22.8 S05 M05B4**	424	**F102_22.8 P63 BN63B4**	425
68	24	5.7	19.3	2540	**F102_19.3 S05 M05B4**	424	**F102_19.3 P63 BN63B4**	425
78	21	6.1	17.0	2440	**F102_17.0 S05 M05B4**	424	**F102_17.0 P63 BN63B4**	425
90	18	6.6	14.6	2330	**F102_14.6 S05 M05B4**	424	**F102_14.6 P63 BN63B4**	425
101	16	6.4	13.0	2240	**F102_13.0 S05 M05B4**	424	**F102_13.0 P63 BN63B4**	425
114	14	6.7	11.5	2150	**F102_11.5 S05 M05B4**	424	**F102_11.5 P63 BN63B4**	425
135	12	7.4	9.8	2040	**F102_9.8 S05 M05B4**	424	**F102_9.8 P63 BN63B4**	425
154	11	7.7	8.6	1960	**F102_8.6 S05 M05B4**	424	**F102_8.6 P63 BN63B4**	425
178	9	8.3	7.4	1870	**F102_7.4 S05 M05B4**	424	**F102_7.4 P63 BN63B4**	425
186	9	10.7	14.6	1860	**F102_14.6 S05 M05A2**	424	**F102_14.6 P63 BN63A2**	425
210	8	10.9	13.0	1790	**F102_13.0 S05 M05A2**	424	**F102_13.0 P63 BN63A2**	425

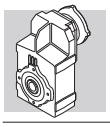

0.18 kW

n_2 min-1	M_2 Nm	S	i	R_{n2} N			IEC	
237	7	11.3	11.5	1720	**F102_11.5 S05 M05A2**	424	**F102_11.5 P63 BN63A2**	425
279	6	12.5	9.8	1630	**F102_9.8 S05 M05A2**	424	**F102_9.8 P63 BN63A2**	425
318	5	13.0	8.6	1560	**F102_8.6 S05 M05A2**	424	**F102_8.6 P63 BN63A2**	425
369	4	14.2	7.4	1490	**F102_7.4 S05 M05A2**	424	**F102_7.4 P63 BN63A2**	425

0.25 kW

n_2 min-1	M_2 Nm	S	i	R_{n2} N			IEC	
0.41	5283	0.9	2188	35000	**F704_2188 S1 M1SD6**	452	**F704_2188 P71 BN71B6**	453
0.45	4877	1.0	2019	35000	**F704_2019 S1 M1SD6**	452	**F704_2019 P71 BN71B6**	453
0.45	4799	1.7	1987	45000	**F804_1987 S1 M1SD6**	455	**F804_1987 P71 BN71B6**	456
0.49	4430	1.8	1834	45000	**F804_1834 S1 M1SD6**	455	**F804_1834 P71 BN71B6**	456
0.52	4146	1.2	1717	35000	**F704_1717 S1 M1SD6**	452	**F704_1717 P71 BN71B6**	453
0.53	4128	1.9	1709	45000	**F804_1709 S1 M1SD6**	455	**F804_1709 P71 BN71B6**	456
0.57	3827	1.3	1585	35000	**F704_1585 S1 M1SD6**	452	**F704_1585 P71 BN71B6**	453
0.57	3810	2.1	1578	45000	**F804_1578 S1 M1SD6**	455	**F804_1578 P71 BN71B6**	456
0.61	3578	1.4	1481	35000	**F704_1481 S1 M1SD6**	452	**F704_1481 P71 BN71B6**	453
0.65	3342	2.4	1384	45000	**F804_1384 S1 M1SD6**	455	**F804_1384 P71 BN71B6**	456
0.66	3303	1.5	1368	35000	**F704_1368 S1 M1SD6**	452	**F704_1368 P71 BN71B6**	453
0.70	3085	2.6	1277	45000	**F804_1277 S1 M1SD6**	455	**F804_1277 P71 BN71B6**	456
0.76	2854	1.8	1182	35000	**F704_1182 S1 M1SD6**	452	**F704_1182 P71 BN71B6**	453
0.79	2757	1.1	1141	20000	**F604_1141 S1 M1SD6**	448	**F604_1141 P71 BN71B6**	449
0.79	2769	2.9	1146	45000	**F804_1146 S1 M1SD6**	455	**F804_1146 P71 BN71B6**	456
0.83	2635	1.9	1091	35000	**F704_1091 S1 M1SD6**	452	**F704_1091 P71 BN71B6**	453
0.85	2545	1.1	1054	20000	**F604_1054 S1 M1SD6**	448	**F604_1054 P71 BN71B6**	449
0.85	2556	3.1	1058	45000	**F804_1058 S1 M1SD6**	455	**F804_1058 P71 BN71B6**	456
0.92	2353	2.1	974.4	35000	**F704_974.4 S1 M1SD6**	452	**F704_974.4 P71 BN71B6**	453
0.94	2316	1.3	958.9	20000	**F604_958.9 S1 M1SD6**	448	**F604_958.9 P71 BN71B6**	449
1.0	2138	1.4	885.1	20000	**F604_885.1 S1 M1SD6**	448	**F604_885.1 P71 BN71B6**	449
1.0	2172	2.3	899.4	35000	**F704_899.4 S1 M1SD6**	452	**F704_899.4 P71 BN71B6**	453
1.1	1996	0.9	826.4	12000	**F514_826.4 S1 M1SD6**	444	**F514_826.4 P71 BN71B6**	445
1.1	1986	2.5	822.2	35000	**F704_822.2 S1 M1SD6**	452	**F704_822.2 P71 BN71B6**	453
1.3	1633	1.1	676.3	12000	**F514_676.3 S1 M1SD6**	444	**F514_676.3 P71 BN71B6**	445
1.4	1600	1.8	662.4	20000	**F604_662.4 S1 M1SD6**	448	**F604_662.4 P71 BN71B6**	449
1.4	1588	3.1	657.4	35000	**F704_657.4 S1 M1SD6**	452	**F704_657.4 P71 BN71B6**	453
1.5	1477	2.0	611.4	20000	**F604_611.4 S1 M1SD6**	448	**F604_611.4 P71 BN71B6**	449
1.5	1466	3.4	606.8	35000	**F704_606.8 S1 M1SD6**	452	**F704_606.8 P71 BN71B6**	453
1.7	1282	0.9	813.8	8500	**F414_813.8 S05 M05C4**	440	**F414_813.8 P71 BN71A4**	441
1.8	1199	0.9	739.4	8500	**F414_739.4 S05 M05C4**	440	**F414_739.4 P71 BN71A4**	441
1.9	1119	1.0	690.1	8500	**F414_690.1 S05 M05C4**	440	**F414_690.1 P71 BN71A4**	441
2.4	892	1.2	549.8	8500	**F414_549.8 S05 M05C4**	440	**F414_549.8 P7 1 BN71A4**	441
2.8	783	2.3	317.3	12000	**F513_317.3 S1 M1SD6**	444	**F513_317.3 P71 BN71B6**	445
3.1	704	1.6	433.7	8500	**F414_433.7 S05 M05C4**	440	**F414_433.7 P71 BN71A4**	441
3.2	679	0.9	418.9	6500	**F314_418.9 S05 M05C4**	436	**F314_418.9 P71 BN71A4**	437
3.7	603	1.0	374.4	6500			**F313_374.4 P71 BN71A4**	437
4.0	555	2.0	344.8	8500			**F413_344.8 P71 BN71A4**	441
4.1	536	1.1	332.8	6500			**F313_332.8 P71 BN71A4**	437
4.7	473	1.3	293.8	6500			**F313_293.8 P71 BN71A4**	437

0.25 kW

n_2 min-1	M_2 Nm	S	i	R_{n2} N			IEC	
4.7	477	2.3	296.6	8500			**F413_296.6 P71 BN71A4**	441
5.2	425	0.9	256.1	6500	**F253_256.1 S05 M05C4**	432	**F253_256.1 P71 BN71A4**	433
5.2	430	2.6	266.9	8500			**F413_266.9 P71 BN71A4**	441
5.4	408	1.5	253.6	6500			**F313_253.6 P71 BN71A4**	437
5.7	387	2.8	240.1	8500			**F413_240.1 P71 BN71A4**	441
5.9	378	1.1	227.8	6500	**F253_227.8 S05 M05C4**	432	**F253_227.8 P71 BN71A4**	433
6.0	367	1.6	228.2	6500			**F313_228.2 P71 BN71A4**	437
6.3	354	3.1	220.1	8500			**F413_220.1 P71 BN71A4**	441
6.8	326	1.8	202.3	6500			**F313_202.3 P71 BN71A4**	437
6.9	321	1.2	193.6	6500	**F253_193.6 S05 M05C4**	432	**F253_193.6 P71 BN71A4**	433
6.9	320	3.4	198.9	8500			**F413_198.9 P71 BN71A4**	441
7.4	299	2.0	185.4	6500			**F313_185.4 P71 BN71A4**	437
7.7	289	1.4	174.2	6500	**F253_174.2 S05 M05C4**	432	**F253_174.2 P71 BN71A4**	433
8.0	278	0.9	172.6	4000	**F203_172.6 S05 M05C4**	428	**F203_172.6 P71 BN71A4**	429
8.3	268	2.2	166.8	6500			**F313_166.8 P71 BN71A4**	437
8.6	259	1.0	156.3	4000	**F203_156.3 S05 M05C4**	428	**F203_156.3 P71 BN71A4**	429
8.6	259	1.5	155.9	6500	**F253_155.9 S05 M05C4**	432	**F253_155.9 P71 BN71A4**	433
9.2	243	2.5	150.8	6500			**F313_150.8 P71 BN71A4**	437
9.7	230	1.7	143.0	6500	**F253_143.0 S05 M05C4**	432	**F253_143.0 P71 BN71A4**	433
9.8	227	2.6	140.7	6500			**F313_140.7 P71 BN71A4**	437
10.1	224	1.1	132.2	4000	**F202_132.2 S05 M05C4**	428	**F202_132.2 P71 BN71A4**	429
10.5	212	1.9	127.8	6500	**F253_127.8 S05 M05C4**	432	**F253_127.8 P71 BN71A4**	433
10.7	207	2.9	128.4	6500			**F313_128.4 P71 BN71A4**	437
11.7	194	1.3	114.3	4000	**F202_114.3 S05 M05C4**	428	**F202_114.3 P71 BN71A4**	429
12.2	182	2.2	113.0	6500	**F253_113.0 S05 M05C4**	432	**F253_113.0 P71 BN71A4**	433
12.3	181	3.3	112.5	6500			**F313_112.5 P71 BN71A4**	437
12.7	175	2.3	105.4	6500	**F253_105.4 S05 M05C4**	432	**F253_105.4 P71 BN71A4**	433
13.2	172	1.5	101.6	4000	**F202_101.6 S05 M05C4**	428	**F202_101.6 P71 BN71A4**	429
14.0	158	2.5	95.5	6500	**F253_95.5 S05 M05C4**	432	**F253_95.5 P71 BN71A4**	433
14.6	155	0.9	91.5	2800	**F102_91.5 S05 M05C4**	424	**F102_91.5 P71 BN71A4**	425
14.8	153	1.6	90.4	4000	**F202_90.4 S05 M05C4**	428	**F202_90.4 P71 BN71A4**	429
16.1	138	2.9	83.4	6500	**F253_83.4 S05 M05C4**	432	**F253_83.4 P71 BN71A4**	433
16.5	138	1.0	81.3	2800	**F102_81.3 S05 M05C4**	424	**F102_81.3 P71 BN71A4**	425
17.4	130	1.9	76.8	4000	**F202_76.8 S05 M05C4**	428	**F202_76.8 P71 BN71A4**	429
17.5	127	3.2	76.6	6420	**F253_76.6 S05 M05C4**	432	**F253_76.6 P71 BN71A4**	433
18.8	120	1.2	71.1	2800	**F102_71.1 S05 M05C4**	424	**F102_71.1 P71 BN71A4**	425
19.4	117	2.1	69.1	4000	**F202_69.1 S05 M05C4**	428	**F202_69.1 P71 BN71A4**	429
21.3	107	1.3	63.0	2800	**F102_63.0 S05 M05C4**	424	**F102_63.0 P71 BN71A4**	425
21.7	105	2.4	61.9	4000	**F202_61.9 S05 M05C4**	428	**F202_61.9 P71 BN71A4**	429
23.6	96	1.5	56.7	2800	**F102_56.7 S05 M05C4**	424	**F102_56.7 P71 BN71A4**	425
23.6	96	2.6	56.7	4000	**F202_56.7 S05 M05C4**	428	**F202_56.7 P71 BN71A4**	429
26.4	86	2.9	50.7	4000	**F202_50.7 S05 M05C4**	428	**F202_50.7 P71 BN71A4**	429
27.5	83	1.7	48.7	2800	**F102_48.7 S05 M05C4**	424	**F102_48.7 P71 BN71A4**	425
29.9	76	3.3	44.8	3870	**F202_44.8 S05 M05C4**	428	**F202_44.8 P71 BN71A4**	429
30.0	76	1.9	44.7	2800	**F102_44.7 S05 M05C4**	424	**F102_44.7 P71 BN71A4**	425
34	67	2.1	39.6	2800	**F102_39.6 S05 M05C4**	424	**F102_39.6 P71 BN71A4**	425
38	60	2.3	35.3	2800	**F102_35.3 S05 M05C4**	424	**F102_35.3 P71 BN71A4**	425
41	56	2.5	33.0	2800	**F102_33.0 S05 M05C4**	424	**F102_33.0 P71 BN71A4**	425
45	50	2.8	29.6	2800	**F102_29.6 S05 M05C4**	424	**F102_29.6 P71 BN71A4**	425
52	44	3.2	25.8	2750	**F102_25.8 S05 M05C4**	424	**F102_25.8 P71 BN71A4**	425
59	39	3.6	22.8	2650	**F102_22.8 S05 M05C4**	424	**F102_22.8 P71 BN71A4**	425

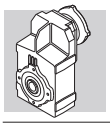

0.25 kW

n_2 min-1	M_2 Nm	S	i	R_{n2} N			IEC	
69	33	4.2	19.3	2520	**F102_19.3 S05 M05C4**	424	**F102_19.3 P71 BN71A4**	425
81	28	4.6	17.0	2420	**F102_17.0 S05 M05C4**	424	**F102_17.0 P71 BN71A4**	425
91	25	4.8	14.6	2310	**F102_14.6 S05 M05C4**	424	**F102_14.6 P71 BN71A4**	425
103	22	4.7	13.0	2230	**F102_13.0 S05 M05C4**	424	**F102_13.0 P71 BN71A4**	425
120	19	5.1	11.5	2140	**F102_11.5 S05 M05C4**	424	**F102_11.5 P71 BN71A4**	425
137	17	5.4	9.8	2030	**F102_9.8 S05 M05C4**	424	**F102_9.8 P71 BN71A4**	425
161	14	5.8	8.6	1950	**F102_8.6 S05 M05C4**	424	**F102_8.6 P71 BN71A4**	425
181	13	6.1	7.4	1860	**F102_7.4 S05 M05C4**	424	**F102_7.4 P71 BN71A4**	425
187	12	7.7	14.6	1850	**F102_14.6 S05 M05B2**	424	**F102_14.6 P63 BN63B2**	425
210	11	7.9	13.0	1780	**F102_13.0 S05 M05B2**	424	**F102_13.0 P63 BN63B2**	425
237	10	8.2	11.5	1710	**F102_11.5 S05 M05B2**	424	**F102_11.5 P63 BN63B2**	425
280	8	9.0	9.8	1620	**F102_9.8 S05 M05B2**	424	**F102_9.8 P63 BN63B2**	425
319	7	9.4	8.6	1550	**F102_8.6 S05 M05B2**	424	**F102_8.6 P63 BN63B2**	425
370	6	10.3	7.4	1480	**F102_7.4 S05 M05B2**	424	**F102_7.4 P63 BN63B2**	425

0.37 kW

n_2 min-1	M_2 Nm	S	i	R_{n2} N			IEC	
0.46	7024	1.1	1987	45000	**F804_1987 S1 M1LA6**	455	**F804_1987 P80 BN80A6**	456
0.50	6484	1.2	1834	45000	**F804_1834 S1 M1LA6**	455	**F804_1834 P80 BN80A6**	456
0.53	6042	1.3	1709	45000	**F804_1709 S1 M1LA6**	455	**F804_1709 P80 BN80A6**	456
0.57	5602	0.9	1585	35000	**F704_1585 S1 M1LA6**	452	**F704_1585 P80 BN80A6**	453
0.58	5577	1.4	1578	45000	**F804_1578 S1 M1LA6**	455	**F804_1578 P80 BN80A6**	456
0.61	5238	1.0	1481	35000	**F704_1481 S1 M1LA6**	452	**F704_1481 P80 BN80A6**	453
0.63	5137	1.0	2188	35000	**F704_2188 S1 M1SD4**	452	**F704_2188 P71 BN71B4**	453
0.68	4742	1.1	2019	35000	**F704_2019 S1 M1SD4**	452	**F704_2019 P71 BN71B4**	453
0.69	4666	1.7	1987	45000	**F804_1987 S1 M1SD4**	455	**F804_1987 P71 BN71B4**	456
0.75	4307	1.9	1834	45000	**F804_1834 S1 M1SD4**	455	**F804_1834 P71 BN71B4**	456
0.80	4031	1.2	1717	35000	**F704_1717 S1 M1SD4**	452	**F704_1717 P71 BN71B4**	453
0.80	4013	2.0	1709	45000	**F804_1709 S1 M1SD4**	455	**F804_1709 P71 BN71B4**	456
0.86	3721	1.3	1585	35000	**F704_1585 S1 M1SD4**	452	**F704_1585 P71 BN71B4**	453
0.87	3705	2.2	1578	45000	**F804_1578 S1 M1SD4**	455	**F804_1578 P71 BN71B4**	456
0.92	3479	1.4	1481	35000	**F704_1481 S1 M1SD4**	452	**F704_1481 P71 BN71B4**	453
0.99	3250	2.5	1384	45000	**F804_1384 S1 M1SD4**	455	**F804_1384 P71 BN71B4**	456
1.0	3211	1.6	1368	35000	**F704_1368 S1 M1SD4**	452	**F704_1368 P71 BN71B4**	453
1.1	3000	2.7	1277	45000	**F804_1277 S1 M1SD4**	455	**F804_1277 P71 BN71B4**	456
1.2	2680	1.1	1141	20000	**F604_1141 S1 M1SD4**	448	**F604_1141 P71 BN71B4**	449
1.2	2775	1.8	1182	35000	**F704_1182 S1 M1SD4**	452	**F704_1182 P71 BN71B4**	453
1.2	2692	3.0	1146	45000	**F804_1146 S1 M1SD4**	455	**F804_1146 P71 BN71B4**	456
1.3	2474	1.2	1054	20000	**F604_1054 S1 M1SD4**	448	**F604_1054 P71 BN71B4**	449
1.3	2562	2.0	1091	35000	**F704_1091 S1 M1SD4**	452	**F704_1091 P71 BN71B4**	453
1.3	2485	3.2	1058	45000	**F804_1058 S1 M1SD4**	455	**F804_1058 P71 BN71B4**	456
1.4	2252	1.3	958.9	20000	**F604_958.9 S1 M1SD4**	448	**F604_958.9 P71 BN71B4**	449
1.4	2288	2.2	974.4	35000	**F704_974.4 S1 M1SD4**	452	**F704_974.4 P71 BN71B4**	453
1.5	2079	0.9	885.5	12000	**F514_885.5 S1 M1SD4**	444	**F514_885.5 P71 BN71B4**	445
1.5	2078	1.4	885.1	20000	**F604_885.1 S1 M1SD4**	448	**F604_885.1 P71 BN71B4**	449
1.5	2112	2.4	899.4	35000	**F704_899.4 S1 M1SD4**	452	**F704_899.4 P71 BN71B4**	453
1.7	1941	0.9	826.4	12000	**F514_826.4 S1 M1SD4**	444	**F514_826.4 P71 BN71B4**	445

0.37 kW

n_2 min-1	M_2 Nm	S	i	R_{n2} N			IEC	
1.7	1931	2.6	822.2	35000	**F704_822.2 S1 M1SD4**	452	**F704_822.2 P71 BN71B4**	453
2.0	1588	1.1	676.3	12000	**F514_676.3 S1 M1SD4**	444	**F514_676.3 P71 BN71B4**	445
2.1	1556	1.9	662.4	20000	**F604_662.4 S1 M1SD4**	448	**F604_662.4 P71 BN71B4**	449
2.1	1544	3.2	657.4	35000	**F704_657.4 S1 M1SD4**	452	**F704_657.4 P71 BN71B4**	453
2.2	1436	2.0	611.4	20000	**F604_611.4 S1 M1SD4**	448	**F604_611.4 P71 BN71B4**	449
2.3	1425	3.5	606.8	35000	**F704_606.8 S1 M1SD4**	452	**F704_606.8 P71 BN71B4**	453
2.5	1291	0.9	549.8	8500	**F414_549.8 S1 M1SD4**	440	**F414_549.8 P71 BN71B4**	441
2.6	1246	1.4	530.5	12000	**F514_530.5 S1 M1SD4**	444	**F514_530.5 P71 BN71B4**	445
2.6	1246	2.3	530.7	20000	**F604_530.7 S1 M1SD4**	448	**F604_530.7 P71 BN71B4**	449
2.8	1150	2.5	489.8	20000	**F604_489.8 S1 M1SD4**	448	**F604_489.8 P71 BN71B4**	449
3.2	1018	1.1	433.7	8500	**F414_433.7 S1 M1SD4**	440	**F414_433.7 P71 BN71B4**	441
3.2	1008	1.8	429.1	12000	**F514_429.1 S1 M1SD4**	444	**F514_429.1 P71 BN71B4**	445
3.2	1016	2.9	432.6	20000	**F604_432.6 S1 M1SD4**	448	**F604_432.6 P71 BN71B4**	449
3.4	938	3.1	399.3	20000	**F604_399.3 S1 M1SD4**	448	**F604_399.3 P71 BN71B4**	449
3.9	846	2.1	352.5	12000	**F513_352.5 S1 M1SD4**	444	**F513_352.5 P71 BN71B4**	445
4.0	827	1.3	344.8	8500	**F413_344.8 S1 M1SD4**	440	**F413_344.8 P71 BN71B4**	441
4.3	761	2.4	317.3	12000	**F513_317.3 S1 M1SD4**	444	**F513_317.3 P71 BN71B4**	445
4.6	712	1.5	296.6	8500	**F413_296.6 S1 M1SD4**	440	**F413_296.6 P71 BN71B4**	441
4.8	686	2.6	285.9	12000	**F513_285.9 S1 M1SD4**	444	**F513_285.9 P71 BN71B4**	445
5.1	641	1.7	266.9	8500	**F413_266.9 S1 M1SD4**	440	**F413_266.9 P71 BN71B4**	441
5.2	629	2.9	262.1	12000	**F513_262.1 S1 M1SD4**	444	**F513_262.1 P71 BN71B4**	445
5.4	609	1.0	253.6	6500	**F313_253.6 S1 M1SD4**	436	**F313_253.6 P71 BN71B4**	437
5.7	576	1.9	240.1	8500	**F413_240.1 S1 M1SD4**	440	**F413_240.1 P71 BN71B4**	441
5.7	576	3.1	239.8	12000	**F513_239.8 S1 M1SD4**	444	**F513_239.8 P71 BN71B4**	445
6.0	548	1.1	228.2	6500	**F313_228.2 S1 M1SD4**	436	**F313_228.2 P71 BN71B4**	437
6.2	528	2.1	220.1	8500	**F413_220.1 S1 M1SD4**	440	**F413_220.1 P71 BN71B4**	441
6.3	520	3.5	216.9	12000	**F513_216.9 S1 M1SD4**	444	**F513_216.9 P71 BN71B4**	445
6.8	485	1.2	202.3	6500	**F313_202.3 S1 M1SD4**	436	**F313_202.3 P71 BN71B4**	437
6.9	477	2.3	198.9	8500	**F413_198.9 S1 M1SD4**	440	**F413_198.9 P71 BN71B4**	441
7.4	445	1.3	185.4	6500	**F313_185.4 S1 M1SD4**	436	**F313_185.4 P71 BN71B4**	437
7.6	434	2.5	180.7	8500	**F413_180.7 S1 M1SD4**	440	**F413_180.7 P71 BN71B4**	441
7.9	418	1.0	174.2	6500	**F253_174.2 S1 M1SD4**	432	**F253_174.2 P71 BN71B4**	433
8.1	405	2.7	168.7	8500	**F413_168.7 S1 M1SD4**	440	**F413_168.7 P71 BN71B4**	441
8.2	400	1.5	166.8	6500	**F313_166.8 S1 M1SD4**	436	**F313_166.8 P71 BN71B4**	437
8.8	374	1.1	155.9	6500	**F253_155.9 S1 M1SD4**	432	**F253_155.9 P71 BN71B4**	433
9.1	362	1.7	150.8	6500	**F313_150.8 S1 M1SD4**	436	**F313_150.8 P71 BN71B4**	437
9.6	343	1.2	143.0	6500	**F253_143.0 S1 M1SD4**	432	**F253_143.0 P71 BN71B4**	433
9.7	338	1.8	140.7	6500	**F313_140.7 S1 M1SD4**	436	**F313_140.7 P71 BN71B4**	437
10.2	323	3.4	134.4	8500	**F413_134.4 S1 M1SD4**	440	**F413_134.4 P71 BN71B4**	441
10.7	307	1.3	127.8	6500	**F253_127.8 S1 M1SD4**	432	**F253_127.8 P71 BN71B4**	433
10.7	308	1.9	128.4	6500	**F313_128.4 S1 M1SD4**	436	**F313_128.4 P71 BN71B4**	437
12.1	271	1.5	113.0	6500	**F253_113.0 S1 M1SD4**	432	**F253_113.0 P71 BN71B4**	433
12.2	270	2.2	112.5	6500	**F313_112.5 S1 M1SD4**	436	**F313_112.5 P71 BN71B4**	437
13.0	253	1.6	105.4	6500	**F253_105.4 S1 M1SD4**	432	**F253_105.4 P71 BN71B4**	433
13.4	245	2.5	101.9	6500	**F313_101.9 S1 M1SD4**	436	**F313_101.9 P71 BN71B4**	437
13.5	249	1.0	101.6	4000			**F202_101.6 P71 BN71B4**	429
14.3	229	1.7	95.5	6490	**F253_95.5 S1 M1SD4**	432	**F253_95.5 P71 BN71B4**	433
15.2	222	1.1	90.4	4000	**F202_90.4 S1 M1SD4**	428	**F202_90.4 P71 BN71B4**	429
15.7	210	2.9	87.4	6500	**F313_87.4 S1 M1SD4**	436	**F313_87.4 P71 BN71B4**	437
16.4	200	2.0	83.4	6280	**F253_83.4 S1 M1SD4**	432	**F253_83.4 P71 BN71B4**	433
17.4	189	3.2	78.9	6500	**F313_78.9 S1 M1SD4**	436	**F313_78.9 P71 BN71B4**	437

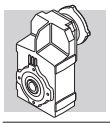

0.37 kW

n_2 min-1	M_2 Nm	S	i	R_{n2} N			IEC	
17.8	188	1.3	76.8	4000	**F202_76.8 S1 M1SD4**	428	**F202_76.8 P71 BN71B4**	429
17.9	184	2.2	76.6	6160	**F253_76.6 S1 M1SD4**	432	**F253_76.6 P71 BN71B4**	433
19.8	169	1.5	69.1	4000	**F202_69.1 S1 M1SD4**	428	**F202_69.1 P71 BN71B4**	429
21.0	157	2.6	65.3	5920	**F253_65.3 S1 M1SD4**	432	**F253_65.3 P71 BN71B4**	433
21.7	154	0.9	63.0	2800	**F102_63.0 S1 M1SD4**	424	**F102_63.0 P71 BN71B4**	425
22.1	152	1.6	61.9	4000	**F202_61.9 S1 M1SD4**	428	**F202_61.9 P71 BN71B4**	429
23.5	140	2.9	58.3	5750	**F253_58.3 S1 M1SD4**	432	**F253_58.3 P71 BN71B4**	433
24.2	139	1.0	56.7	2800	**F102_56.7 S1 M1SD4**	424	**F102_56.7 P71 BN71B4**	425
24.2	139	1.8	56.7	4000	**F202_56.7 S1 M1SD4**	428	**F202_56.7 P71 BN71B4**	429
27.0	124	2.0	50.7	3900	**F202_50.7 S1 M1SD4**	428	**F202_50.7 P71 BN71B4**	429
27.0	122	3.3	50.8	5540	**F253_50.8 S1 M1SD4**	432	**F253_50.8 P71 BN71B4**	433
28.1	119	1.2	48.7	2800	**F102_48.7 S1 M1SD4**	424	**F102_48.7 P71 BN71B4**	425
31	110	1.3	44.7	2800	**F102_44.7 S1 M1SD4**	424	**F102_44.7 P71 BN71B4**	425
31	110	2.3	44.8	3770	**F202_44.8 S1 M1SD4**	428	**F202_44.8 P71 BN71B4**	429
31	109	3.5	44.4	5370	**F252_44.4 S1 M1SD4**	432	**F252_44.4 P71 BN71B4**	433
33	103	2.4	41.8	3700	**F202_41.8 S1 M1SD4**	428	**F202_41.8 P71 BN71B4**	429
35	97	1.4	39.6	2800	**F102_39.6 S1 M1SD4**	424	**F102_39.6 P71 BN71B4**	425
36	93	2.7	37.9	3600	**F202_37.9 S1 M1SD4**	428	**F202_37.9 P71 BN71B4**	429
39	87	1.6	35.3	2800	**F102_35.3 S1 M1SD4**	424	**F102_35.3 P71 BN71B4**	425
41	81	3.1	33.1	3460	**F202_33.1 S1 M1SD4**	428	**F202_33.1 P71 BN71B4**	429
42	81	1.7	33.0	2800	**F102_33.0 S1 M1SD4**	424	**F102_33.0 P71 BN71B4**	425
45	75	3.4	30.4	3380	**F202_30.4 S1 M1SD4**	428	**F202_30.4 P71 BN71B4**	429
46	73	1.9	29.6	2800	**F102_29.6 S1 M1SD4**	424	**F102_29.6 P71 BN71B4**	425
53	63	2.2	25.8	2690	**F102_25.8 S1 M1SD4**	424	**F102_25.8 P71 BN71B4**	425
60	56	2.5	22.8	2600	**F102_22.8 S1 M1SD4**	424	**F102_22.8 P71 BN71B4**	425
71	47	2.9	19.3	2470	**F102_19.3 S1 M1SD4**	424	**F102_19.3 P71 BN71B4**	425
81	42	3.1	17.0	2380	**F102_17.0 S1 M1SD4**	424	**F102_17.0 P71 BN71B4**	425
94	36	3.3	14.6	2280	**F102_14.6 S1 M1SD4**	424	**F102_14.6 P71 BN71B4**	425
105	32	3.3	13.0	2200	**F102_13.0 S1 M1SD4**	424	**F102_13.0 P71 BN71B4**	425
119	28	3.4	11.5	2120	**F102_11.5 S1 M1SD4**	424	**F102_11.5 P71 BN71B4**	425
140	24	3.7	9.8	2010	**F102_9.8 S1 M1SD4**	424	**F102_9.8 P71 BN71B4**	425
160	21	3.9	8.6	1930	**F102_8.6 S1 M1SD4**	424	**F102_8.6 P71 BN71B4**	425
185	18	4.2	7.4	1850	**F102_7.4 S1 M1SD4**	424	**F102_7.4 P71 BN71B4**	425
193	17	5.4	14.6	1830	**F102_14.6 S05 M05C2**	424	**F102_14.6 P71 BN71A2**	425
216	16	5.5	13.0	1760	**F102_13.0 S05 M05C2**	424	**F102_13.0 P71 BN71A2**	425
244	14	5.7	11.5	1690	**F102_11.5 S05 M05C2**	424	**F102_11.5 P71 BN71A2**	425
289	12	6.3	9.8	1610	**F102_9.8 S05 M05C2**	424	**F102_9.8 P71 BN71A2**	425
329	10	6.6	8.6	1540	**F102_8.6 S05 M05C2**	424	**F102_8.6 P71 BN71A2**	425
381	9	7.1	7.4	1470	**F102_7.4 S05 M05C2**	424	**F102_7.4 P71 BN71A2**	425

0.55 kW

n_2	M_2	S	i	R_{n2}			IEC	
0.44	10909	1.3	2099	55000	**F904_2099 S2 M2SA6**	458	**F904_2099 P80 BN80B6**	459
0.47	10070	1.4	1937	55000	**F904_1937 S2 M2SA6**	458	**F904_1937 P80 BN80B6**	459
0.54	8884	0.9	1709	45000	**F804_1709 S2 M2SA6**	455	**F804_1709 P80 BN80B6**	456
0.54	8849	1.6	1702	55000	**F904_1702 S2 M2SA6**	458	**F904_1702 P80 BN80B6**	459
0.58	8201	1.0	1578	45000	**F804_1578 S2 M2SA6**	455	**F804_1578 P80 BN80B6**	456

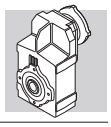

0.55 kW

n_2	M_2	S	i	R_{n2}			IEC	
0.59	8168	1.7	1571	55000	**F904_1571 S2 M2SA6**	458	**F904_1571 P80 BN80B6**	459
0.64	7422	1.9	1428	55000	**F904_1428 S2 M2SA6**	458	**F904_1428 P80 BN80B6**	459
0.66	7193	1.1	1384	45000	**F804_1384 S2 M2SA6**	455	**F804_1384 P80 BN80B6**	456
0.69	6885	1.2	1987	45000	**F804_1987 S1 M1LA4**	455	**F804_1987 P80 BN80A4**	456
0.75	6356	1.3	1834	45000	**F804_1834 S1 M1LA4**	455	**F804_1834 P80 BN80A4**	456
0.81	5923	1.4	1709	45000	**F804_1709 S1 M1LA4**	455	**F804_1709 P80 BN80A4**	456
0.87	5491	0.9	1585	35000	**F704_1585 S1 M1LA4**	452	**F704_1585 P80 BN80A4**	453
0.87	5467	1.5	1578	45000	**F804_1578 S1 M1LA4**	455	**F804_1578 P80 BN80A4**	456
0.93	5134	1.0	1481	35000	**F704_1481 S1 M1LA4**	452	**F704_1481 P80 BN80A4**	453
1.0	4739	1.1	1368	35000	**F704_1368 S1 M1LA4**	452	**F704_1368 P80 BN80A4**	453
1.0	4795	1.7	1384	45000	**F804_1384 S1 M1LA4**	455	**F804_1384 P80 BN80A4**	456
1.1	4427	1.8	1277	45000	**F804_1277 S1 M1LA4**	455	**F804_1277 P80 BN80A4**	456
1.2	4095	1.2	1182	35000	**F704_1182 S1 M1LA4**	452	**F704_1182 P80 BN80A4**	453
1.2	3972	2.0	1146	45000	**F804_1146 S1 M1LA4**	455	**F804_1146 P80 BN80A4**	456
1.3	3780	1.3	1091	35000	**F704_1091 S1 M1LA4**	452	**F704_1091 P80 BN80A4**	453
1.3	3667	2.2	1058	45000	**F804_1058 S1 M1LA4**	455	**F804_1058 P80 BN80A4**	456
1.4	3323	0.9	958.9	20000	**F604_958.9 S1 M1LA4**	448	**F604_958.9 P80 BN80A4**	449
1.4	3377	1.5	974.4	35000	**F704_974.4 S1 M1LA4**	452	**F704_974.4 P80 BN80A4**	453
1.5	3117	1.6	899.4	35000	**F704_899.4 S1 M1LA4**	452	**F704_899.4 P80 BN80A4**	453
1.5	3109	2.6	897.3	45000	**F804_897.3 S1 M1LA4**	455	**F804_897.3 P80 BN80A4**	456
1.6	3067	0.9	885.1	20000	**F604_885.1 S1 M1LA4**	448	**F604_885.1 P80 BN80A4**	449
1.7	2849	1.8	822.2	35000	**F704_822.2 S1 M1LA4**	452	**F704_822.2 P80 BN80A4**	453
1.8	2684	3.0	774.4	45000	**F804_774.4 S1 M1LA4**	455	**F804_774.4 P80 BN80A4**	456
1.9	2477	3.2	714.9	45000	**F804_714.9 S1 M1LA4**	455	**F804_714.9 P80 BN80A4**	456
2.1	2295	1.3	662.4	20000	**F604_662.4 S1 M1LA4**	448	**F604_662.4 P80 BN80A4**	449
2.1	2278	2.2	657.4	35000	**F704_657.4 S1 M1LA4**	452	**F704_657.4 P80 BN80A4**	453
2.3	2119	1.4	611.4	20000	**F604_611.4 S1 M1LA4**	448	**F604_611.4 P80 BN80A4**	449
2.3	2103	2.4	606.8	35000	**F704_606.8 S1 M1LA4**	452	**F704_606.8 P80 BN80A4**	453
2.6	1838	1.0	530.5	12000	**F514_530.5 S1 M1LA4**	444	**F514_530.5 P80 BN80A4**	445
2.6	1839	1.6	530.7	20000	**F604_530.7 S1 M1LA4**	448	**F604_530.7 P80 BN80A4**	449
2.7	1769	2.8	510.4	35000	**F704_510.4 S1 M1LA4**	452	**F704_510.4 P80 BN80A4**	453
2.8	1698	1.7	489.8	20000	**F604_489.8 S1 M1LA4**	448	**F604_489.8 P80 BN80A4**	449
2.9	1633	3.1	471.2	35000	**F704_471.2 S1 M1LA4**	452	**F704_471.2 P80 BN80A4**	453
3.2	1487	1.2	429.1	12000	**F514_429.1 S1 M1LA4**	444	**F514_429.1 P80 BN80A4**	445
3.2	1499	1.9	432.6	20000	**F604_432.6 S1 M1LA4**	448	**F604_432.6 P80 BN80A4**	449
3.5	1384	2.1	399.3	20000	**F604_399.3 S1 M1LA4**	448	**F604_399.3 P80 BN80A4**	449
3.9	1248	1.4	352.5	12000	**F513_352.5 S1 M1LA4**	444	**F513_352.5 P80 BN80A4**	445
4.0	1221	0.9	344.8	8500	**F413_344.8 S1 M1LA4**	440	**F413_344.8 P80 BN80A4**	441
4.0	1184	2.4	341.7	20000	**F604_341.7 S1 M1LA4**	448	**F604_341.7 P80 BN80A4**	449
4.3	1124	1.6	317.3	12000	**F513_317.3 S1 M1LA4**	444	**F513_317.3 P80 BN80A4**	445
4.4	1093	2.7	315.4	20000	**F604_315.4 S1 M1LA4**	448	**F604_315.4 P80 BN80A4**	449
4.7	1050	1.0	296.6	8500	**F413_296.6 S1 M1LA4**	440	**F413_296.6 P80 BN80A4**	441
4.8	1013	1.8	285.9	12000	**F513_285.9 S1 M1LA4**	444	**F513_285.9 P80 BN80A4**	445
5.2	945	1.2	266.9	8500	**F413_266.9 S1 M1LA4**	440	**F413_266.9 P80 BN80A4**	441
5.3	928	1.9	262.1	12000	**F513_262.1 S1 M1LA4**	444	**F513_262.1 P80 BN80A4**	445
5.7	850	1.3	240.1	8500	**F413_240.1 S1 M1LA4**	440	**F413_240.1 P80 BN80A4**	441
5.8	849	2.1	239.8	12000	**F513_239.8 S1 M1LA4**	444	**F513_239.8 P80 BN80A4**	445
6.3	780	1.4	220.1	8500	**F413_220.1 S1 M1LA4**	440	**F413_220.1 P80 BN80A4**	441
6.4	768	2.3	216.9	12000	**F513_216.9 S1 M1LA4**	444	**F513_216.9 P80 BN80A4**	445
6.8	717	2.5	202.4	12000	**F513_202.4 S1 M1LA4**	444	**F513_202.4 P80 BN80A4**	445
6.9	704	1.6	198.9	8500	**F413_198.9 S1 M1LA4**	440	**F413_198.9 P80 BN80A4**	441

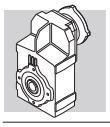

0.55 kW

n_2	M_2	S	i	R_{n2}			IEC	
7.4	657	0.9	185.4	6500	**F313_185.4 S1 M1LA4**	436	**F313_185.4 P80 BN80A4**	437
7.6	640	1.7	180.7	8500	**F413_180.7 S1 M1LA4**	440	**F413_180.7 P80 BN80A4**	441
8.2	597	1.8	168.7	8500	**F413_168.7 S1 M1LA4**	440	**F413_168.7 P80 BN80A4**	441
8.3	591	1.0	166.8	6500	**F313_166.8 S1 M1LA4**	436	**F313_166.8 P80 BN80A4**	437
8.3	587	3.1	165.6	12000	**F513_165.6 S1 M1LA4**	444	**F513_165.6 P80 BN80A4**	445
9.2	534	1.1	150.8	6500	**F313_150.8 S1 M1LA4**	436	**F313_150.8 P80 BN80A4**	437
9.8	498	1.2	140.7	6500	**F313_140.7 S1 M1LA4**	436	**F313_140.7 P80 BN80A4**	437
10.3	476	2.3	134.4	8500	**F413_134.4 S1 M1LA4**	440	**F413_134.4 P80 BN80A4**	441
10.7	455	1.3	128.4	6500	**F313_128.4 S1 M1LA4**	436	**F313_128.4 P80 BN80A4**	437
12.2	400	1.0	113.0	6130	**F253_113.0 S1 M1LA4**	432	**F253_113.0 P80 BN80A4**	433
12.3	399	1.5	112.5	6500	**F313_112.5 S1 M1LA4**	436	**F313_112.5 P80 BN80A4**	437
13.0	375	2.9	106.0	8500	**F413_106.0 S1 M1LA4**	440	**F413_106.0 P80 BN80A4**	441
13.1	373	1.1	105.4	6070	**F253_105.4 S1 M1LA4**	432	**F253_105.4 P80 BN80A4**	433
13.5	361	1.7	101.9	6500	**F313_101.9 S1 M1LA4**	436	**F313_101.9 P80 BN80A4**	437
14.5	338	1.2	95.5	5980	**F253_95.5 S1 M1LA4**	432	**F253_95.5 P80 BN80A4**	433
15.8	309	1.9	87.4	6500	**F313_87.4 S1 M1LA4**	436	**F313_87.4 P80 BN80A4**	437
16.5	295	1.4	83.4	5840	**F253_83.4 S1 M1LA4**	432	**F253_83.4 P80 BN80A4**	433
17.5	279	2.1	78.9	6500	**F313_78.9 S1 M1LA4**	436	**F313_78.9 P80 BN80A4**	437
18.0	278	0.9	76.8	4000	**F202_76.8 S1 M1LA4**	428	**F202_76.8 P80 BN80A4**	429
18.0	271	1.5	76.6	5750	**F253_76.6 S1 M1LA4**	432	**F253_76.6 P80 BN80A4**	433
20.0	250	1.0	69.1	3980	**F202_69.1 S1 M1LA4**	428	**F202_69.1 P80 BN80A4**	429
20.0	245	2.5	69.1	6500	**F313_69.1 S1 M1LA4**	436	**F313_69.1 P80 BN80A4**	437
21.1	231	1.7	65.3	5570	**F253_65.3 S1 M1LA4**	432	**F253_65.3 P80 BN80A4**	433
22.1	221	2.7	62.8	6500			**F313_62.8 P80 BN80A4**	437
22.3	224	1.1	61.9	3890	**F202_61.9 S1 M1LA4**	428	**F202_61.9 P80 BN80A4**	429
23.7	207	1.9	58.3	5430	**F253_58.3 S1 M1LA4**	432	**F253_58.3 P80 BN80A4**	433
24.3	205	1.2	56.7	3810	**F202_56.7 S1 M1LA4**	428	**F202_56.7 P80 BN80A4**	429
26.7	183	3.3	52.1	6500			**F313_52.1 P80 BN80A4**	437
27.2	184	1.4	50.7	3720	**F202_50.7 S1 M1LA4**	428	**F202_50.7 P80 BN80A4**	429
27.2	180	2.2	50.8	5270	**F253_50.8 S1 M1LA4**	432	**F253_50.8 P80 BN80A4**	433
29.2	167	3.5	47.5	6500			**F313_47.5 P80 BN80A4**	437
31	162	1.5	44.8	3610	**F202_44.8 S1 M1LA4**	428	**F202_44.8 P80 BN80A4**	429
31	161	2.4	44.4	5140	**F252_44.4 S1 M1LA4**	432	**F252_44.4 P80 BN80A4**	433
31	160	2.5	45.6	5130			**F253_45.6 P80 BN80A4**	433
33	151	1.7	41.8	3550	**F202_41.8 S1 M1LA4**	428	**F202_41.8 P80 BN80A4**	429
34	147	2.5	40.7	5030	**F252_40.7 S1 M1LA4**	432	**F252_40.7 P80 BN80A4**	433
35	143	1.0	39.6	2800	**F102_39.6 S1 M1LA4**	424	**F102_39.6 P80 BN80A4**	425
36	137	1.8	37.9	3460	**F202_37.9 S1 M1LA4**	428	**F202_37.9 P80 BN80A4**	429
38	132	3.0	36.4	4890	**F252_36.4 S1 M1LA4**	432	**F252_36.4 P80 BN80A4**	433
39	128	1.1	35.3	2800	**F102_35.3 S1 M1LA4**	424	**F102_35.3 P80 BN80A4**	425
42	119	1.2	33.0	2750	**F102_33.0 S1 M1LA4**	424	**F102_33.0 P80 BN80A4**	425
42	120	2.1	33.1	3340	**F202_33.1 S1 M1LA4**	428	**F202_33.1 P80 BN80A4**	429
43	116	3.4	32.2	4730	**F252_32.2 S1 M1LA4**	432	**F252_32.2 P80 BN80A4**	433
45	110	2.3	30.4	3260	**F202_30.4 S1 M1LA4**	428	**F202_30.4 P80 BN80A4**	429
47	107	1.3	29.6	2680	**F102_29.6 S1 M1LA4**	424	**F102_29.6 P80 BN80A4**	425
53	94	2.6	25.9	3130	**F202_25.9 S1 M1LA4**	428	**F202_25.9 P80 BN80A4**	429
54	93	1.5	25.8	2590	**F102_25.8 S1 M1LA4**	424	**F102_25.8 P80 BN80A4**	425
60	83	1.7	22.8	2510	**F102_22.8 S1 M1LA4**	424	**F102_22.8 P80 BN80A4**	425
60	84	2.8	23.1	3030	**F202_23.1 S1 M1LA4**	428	**F202_23.1 P80 BN80A4**	429
68	73	3.1	20.2	2910	**F202_20.2 S1 M1LA4**	428	**F202_20.2 P80 BN80A4**	429
71	70	1.9	19.3	2400	**F102_19.3 S1 M1LA4**	424	**F102_19.3 P80 BN80A4**	425

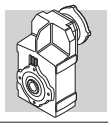

0.55 kW

n_2	M_2	S	i	R_{n2}			IEC	
77	65	3.3	18.1	2820	**F202_18.1 S1 M1LA4**	428	**F202_18.1 P80 BN80A4**	429
81	61	2.1	17.0	2310	**F102_17.0 S1 M1LA4**	424	**F102_17.0 P80 BN80A4**	425
94	53	2.2	14.6	2220	**F102_14.6 S1 M1LA4**	424	**F102_14.6 P80 BN80A4**	425
106	47	2.2	13.0	2140	**F102_13.0 S1 M1LA4**	424	**F102_13.0 P80 BN80A4**	425
120	42	2.3	11.5	2070	**F102_11.5 S1 M1LA4**	424	**F102_11.5 P80 BN80A4**	425
141	35	2.5	9.8	1970	**F102_9.8 S1 M1LA4**	424	**F102_9.8 P80 BN80A4**	425
161	31	2.6	8.6	1890	**F102_8.6 S1 M1LA4**	424	**F102_8.6 P80 BN80A4**	425
186	27	2.8	7.4	1810	**F102_7.4 S1 M1LA4**	424	**F102_7.4 P80 BN80A4**	425
193	26	3.6	14.6	1800	**F102_14.6 S1 M1SD2**	424	**F102_14.6 P71 BN71B2**	425
216	23	3.7	13.0	1730	**F102_13.0 S1 M1SD2**	424	**F102_13.0 P71 BN71B2**	425
244	20	3.8	11.5	1670	**F102_11.5 S1 M1SD2**	424	**F102_11.5 P71 BN71B2**	425
289	17	4.2	9.8	1590	**F102_9.8 S1 M1SD2**	424	**F102_9.8 P71 BN71B2**	425
329	15	4.4	8.6	1530	**F102_8.6 S1 M1SD2**	424	**F102_8.6 P71 BN71B2**	425
381	13	4.8	7.4	1460	**F102_7.4 S1 M1SD2**	424	**F102_7.4 P71 BN71B2**	425

0.75 kW

n_2 min-1	M_2 Nm	S	i	R_{n2} N			IEC	
0.44	14876	0.9	2099	55000	**F904_2099 S2 M2SB6**	458	**F904_2099 P90 BN90S6**	459
0.47	13732	1.0	1937	55000	**F904_1937 S2 M2SB6**	458	**F904_1937 P90 BN90S6**	459
0.54	12067	1.2	1702	55000	**F904_1702 S2 M2SB6**	458	**F904_1702 P90 BN90S6**	459
0.59	11138	1.3	1571	55000	**F904_1571 S2 M2SB6**	458	**F904_1571 P90 BN90S6**	459
0.64	10121	1.4	1428	55000	**F904_1428 S2 M2SB6**	458	**F904_1428 P90 BN90S6**	459
0.67	9776	1.4	2099	55000	**F904_2099 S2 M2SA4**	458	**F904_2099 P80 BN80B4**	459
0.70	9255	0.9	1987	45000	**F804_1987 S2 M2SA4**	455	**F804_1987 P80 BN80B4**	456
0.72	9024	1.6	1937	55000	**F904_1937 S2 M2SA4**	458	**F904_1937 P80 BN80B4**	459
0.76	8543	0.9	1834	45000	**F804_1834 S2 M2SA4**	455	**F804_1834 P80 BN80B4**	456
0.82	7961	1.0	1709	45000	**F804_1709 S2 M2SA4**	455	**F804_1709 P80 BN80B4**	456
0.82	7930	1.8	1702	55000	**F904_1702 S2 M2SA4**	458	**F904_1702 P80 BN80B4**	459
0.89	7349	1.1	1578	45000	**F804_1578 S2 M2SA4**	455	**F804_1578 P80 BN80B4**	456
0.89	7320	1.9	1571	55000	**F904_1571 S2 M2SA4**	458	**F904_1571 P80 BN80B4**	459
0.98	6651	2.1	1428	55000	**F904_1428 S2 M2SA4**	458	**F904_1428 P80 BN80B4**	459
1.0	6446	1.2	1384	45000	**F804_1384 S2 M2SA4**	455	**F804_1384 P80 BN80B4**	456
1.1	5950	1.3	1277	45000	**F804_1277 S2 M2SA4**	455	**F804_1277 P80 BN80B4**	456
1.1	6140	2.3	1318	55000	**F904_1318 S2 M2SA4**	458	**F904_1318 P80 BN80B4**	459
1.2	5505	0.9	1182	35000	**F704_1182 S2 M2SA4**	452	**F704_1182 P80 BN80B4**	453
1.2	5339	1.5	1146	45000	**F804_1146 S2 M2SA4**	455	**F804_1146 P80 BN80B4**	456
1.2	5613	2.5	1205	55000	**F904_1205 S2 M2SA4**	458	**F904_1205 P80 BN80B4**	459
1.3	5082	1.0	1091	35000	**F704_1091 S2 M2SA4**	452	**F704_1091 P80 BN80B4**	453
1.3	4929	1.6	1058	45000	**F804_1058 S2 M2SA4**	455	**F804_1058 P80 BN80B4**	456
1.3	5181	2.7	1112	55000	**F904_1112 S2 M2SA4**	458	**F904_1112 P80 BN80B4**	459
1.4	4539	1.1	974.4	35000	**F704_974.4 S2 M2SA4**	452	**F704_974.4 P80 BN80B4**	453
1.5	4240	3.3	910.2	55000	**F904_910.2 S2 M2SA4**	458	**F904_910.2 P80 BN80B4**	459
1.6	4190	1.2	899.4	35000	**F704_899.4 S2 M2SA4**	452	**F704_899.4 P80 BN80B4**	453
1.6	4180	1.9	897.3	45000	**F804_897.3 S2 M2SA4**	455	**F804_897.3 P80 BN80B4**	456
1.7	3830	1.3	822.2	35000	**F704_822.2 S2 M2SA4**	452	**F704_822.2 P80 BN80B4**	453
1.8	3607	2.2	774.4	45000	**F804_774.4 S2 M2SA4**	455	**F804_774.4 P80 BN80B4**	456
2.0	3330	2.4	714.9	45000	**F804_714.9 S2 M2SA4**	455	**F804_714.9 P80 BN80B4**	456

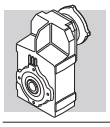

0.75 kW

n_2 min-1	M_2 Nm	S	i	R_{n2} N			IEC	
2.1	3085	0.9	662.4	20000	**F604_662.4 S2 M2SA4**	448	**F604_662.4 P80 BN80B4**	449
2.1	3062	1.6	657.4	35000	**F704_657.4 S2 M2SA4**	452	**F704_657.4 P80 BN80B4**	453
2.3	2848	1.0	611.4	20000	**F604_611.4 S2 M2SA4**	448	**F604_611.4 P80 BN80B4**	449
2.3	2827	1.8	606.8	35000	**F704_606.8 S2 M2SA4**	452	**F704_606.8 P80 BN80B4**	453
2.3	2845	2.8	610.9	45000	**F804_610.9 S2 M2SA4**	455	**F804_610.9 P80 BN80B4**	456
2.5	2627	3.0	563.9	45000	**F804_563.9 S2 M2SA4**	455	**F804_563.9 P80 BN80B4**	456
2.6	2472	1.2	530.7	20000	**F604_530.7 S2 M2SA4**	448	**F604_530.7 P80 BN80B4**	449
2.7	2378	2.1	510.4	35000	**F704_510.4 S2 M2SA4**	452	**F704_510.4 P80 BN80B4**	453
2.9	2282	1.3	489.8	20000	**F604_489.8 S2 M2SA4**	448	**F604_489.8 P80 BN80B4**	449
2.9	2278	3.5	489.1	45000	**F804_489.1 S2 M2SA4**	455	**F804_489.1 P80 BN80B4**	456
3.0	2195	2.3	471.2	35000	**F704_471.2 S2 M2SA4**	452	**F704_471.2 P80 BN80B4**	453
3.2	2015	1.4	432.6	20000	**F604_432.6 S2 M2SA4**	448	**F604_432.6 P80 BN80B4**	449
3.3	1999	0.9	429.1	12000	**F514_429.1 S2 M2SA4**	444	**F514_429.1 P80 BN80B4**	445
3.5	1860	1.6	399.3	20000	**F604_399.3 S2 M2SA4**	448	**F604_399.3 P80 BN80B4**	449
3.5	1880	2.7	403.5	35000	**F704_403.5 S2 M2SA4**	452	**F704_403.5 P80 BN80B4**	453
3.8	1735	2.9	372.5	35000	**F704_372.5 S2 M2SA4**	452	**F704_372.5 P80 BN80B4**	453
4.0	1678	1.1	352.5	12000	**F513_352.5 S2 M2SA4**	444	**F513_352.5 P80 BN80B4**	445
4.1	1592	1.8	341.7	20000	**F604_341.7 S2 M2SA4**	448	**F604_341.7 P80 BN80B4**	449
4.4	1510	1.2	317.3	12000	**F513_317.3 S2 M2SA4**	444	**F513_317.3 P80 BN80B4**	445
4.4	1469	2.0	315.4	20000	**F604_315.4 S2 M2SA4**	448	**F604_315.4 P80 BN80B4**	449
4.6	1418	3.5	304.3	35000	**F704_304.3 S2 M2SA4**	452	**F704_304.3 P80 BN80B4**	453
4.9	1361	1.3	285.9	12000	**F513_285.9 S2 M2SA4**	444	**F513_285.9 P80 BN80B4**	445
5.0	1335	2.2	280.7	20000	**F603_280.7 S2 M2SA4**	448	**F603_280.7 P80 BN80B4**	449
5.3	1248	1.4	262.1	12000	**F513_262.1 S2 M2SA4**	444	**F513_262.1 P80 BN80B4**	445
5.4	1233	2.4	259.1	20000	**F603_259.1 S2 M2SA4**	448	**F603_259.1 P80 BN80B4**	449
5.8	1143	1.0	240.1	8500	**F413_240.1 S2 M2SA4**	440	**F413_240.1 P80 BN80B4**	441
5.8	1142	1.6	239.8	12000	**F513_239.8 S2 M2SA4**	444	**F513_239.8 P80 BN80B4**	445
5.9	1122	2.6	235.8	20000	**F603_235.8 S2 M2SA4**	448	**F603_235.8 P80 BN80B4**	449
6.4	1048	1.0	220.1	8500	**F413_220.1 S2 M2SA4**	440	**F413_220.1 P80 BN80B4**	441
6.4	1036	2.8	217.6	20000	**F603_217.6 S2 M2SA4**	448	**F603_217.6 P80 BN80B4**	449
6.5	1032	1.7	216.9	12000	**F513_216.9 S2 M2SA4**	444	**F513_216.9 P80 BN80B4**	445
6.9	963	1.9	202.4	12000	**F513_202.4 S2 M2SA4**	444	**F513_202.4 P80 BN80B4**	445
7.0	958	3.0	201.4	20000	**F603_201.4 S2 M2SA4**	448	**F603_201.4 P80 BN80B4**	449
7.0	947	1.2	198.9	8500	**F413_198.9 S2 M2SA4**	440	**F413_198.9 P80 BN80B4**	441
7.5	885	3.3	185.9	20000	**F603_185.9 S2 M2SA4**	448	**F603_185.9 P80 BN80B4**	449
7.7	860	1.3	180.7	8500	**F413_180.7 S2 M2SA4**	440	**F413_180.7 P80 BN80B4**	441
8.3	803	1.4	168.7	8500	**F413_168.7 S2 M2SA4**	440	**F413_168.7 P80 BN80B4**	441
8.5	788	2.3	165.6	12000	**F513_165.6 S2 M2SA4**	444	**F513_165.6 P80 BN80B4**	445
8.6	775	3.7	162.9	20000	**F603_162.9 S2 M2SA4**	448	**F603_162.9 P80 BN80B4**	449
10.4	640	1.7	134.4	8500	**F413_134.4 S2 M2SA4**	440	**F413_134.4 P80 BN80B4**	441
10.8	618	2.9	129.9	12000	**F513_129.9 S2 M2SA4**	444	**F513_129.9 P80 BN80B4**	445
10.9	611	1.0	128.4	6500	**F313_128.4 S2 M2SA4**	436	**F313_128.4 P80 BN80B4**	437
12.4	536	1.1	112.5	6500	**F313_112.5 S2 M2SA4**	436	**F313_112.5 P80 BN80B4**	437
13.2	505	2.2	106.0	8500	**F413_106.0 S2 M2SA4**	440	**F413_106.0 P80 BN80B4**	441
13.7	485	1.2	101.9	6500	**F313_101.9 S2 M2SA4**	436	**F313_101.9 P80 BN80B4**	437
16.0	416	1.4	87.4	6500	**F313_87.4 S2 M2SA4**	436	**F313_87.4 P80 BN80B4**	437
16.5	404	2.7	84.9	8500	**F413_84.9 S2 M2SA4**	440	**F413_84.9 P80 BN80B4**	441
16.8	397	1.0	83.4	5350	**F253_83.4 S2 M2SA4**	432	**F253_83.4 P80 BN80B4**	433
17.8	375	1.6	78.9	6500	**F313_78.9 S2 M2SA4**	436	**F313_78.9 P80 BN80B4**	437
18.3	365	1.1	76.6	5300	**F253_76.6 S2 M2SA4**	432	**F253_76.6 P80 BN80B4**	433
20.3	329	1.8	69.1	6500	**F313_69.1 S2 M2SA4**	436	**F313_69.1 P80 BN80B4**	437

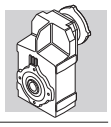

0.75 kW

n_2 min-1	M_2 Nm	S	i	R_{n2} N			IEC	
21.1	317	3.5	66.5	8500	**F413_66.5 S2 M2SA4**	440	**F413_66.5 P80 BN80B4**	441
21.4	311	1.3	65.3	5180	**F253_65.3 S2 M2SA4**	432	**F253_65.3 P80 BN80B4**	433
22.3	299	2.0	62.8	6500	**F313_62.8 S2 M2SA4**	436	**F313_62.8 P80 BN80B4**	437
24.0	278	1.4	58.3	5080	**F253_58.3 S2 M2SA4**	432	**F253_58.3 P80 BN80B4**	433
24.7	276	0.9	56.7	3590	**F202_56.7 S2 M2SA4**	428	**F202_56.7 P80 BN80B4**	429
26.9	248	2.4	52.1	6500	**F313_52.1 S2 M2SA4**	436	**F313_52.1 P80 BN80B4**	437
27.6	247	1.0	50.7	3510	**F202_50.7 S2 M2SA4**	428	**F202_50.7 P80 BN80B4**	429
27.6	242	1.7	50.8	4960	**F253_50.8 S2 M2SA4**	432	**F253_50.8 P80 BN80B4**	433
29.4	226	2.6	47.5	6500	**F313_47.5 S2 M2SA4**	436	**F313_47.5 P80 BN80B4**	437
31	218	1.1	44.8	3420	**F202_44.8 S2 M2SA4**	428	**F202_44.8 P80 BN80B4**	429
31	217	1.8	45.6	4860	**F253_45.6 S2 M2SA4**	432	**F253_45.6 P80 BN80B4**	433
31	217	2.8	44.6	6500	**F312_44.6 S2 M2SA4**	436	**F312_44.6 P80 BN80B4**	437
32	216	1.8	44.4	4890	**F252_44.4 S2 M2SA4**	432	**F252_44.4 P80 BN80B4**	433
33	203	1.2	41.8	3370	**F202_41.8 S2 M2SA4**	428	**F202_41.8 P80 BN80B4**	429
34	198	1.9	40.7	4790	**F252_40.7 S2 M2SA4**	432	**F252_40.7 P80 BN80B4**	433
35	196	3.1	40.4	6500	**F312_40.4 S2 M2SA4**	436	**F312_40.4 P80 BN80B4**	437
37	184	1.4	37.9	3300	**F202_37.9 S2 M2SA4**	428	**F202_37.9 P80 BN80B4**	429
37	183	3.3	37.7	6500	**F312_37.7 S2 M2SA4**	436	**F312_37.7 P80 BN80B4**	437
38	177	2.3	36.4	4680	**F252_36.4 S2 M2SA4**	432	**F252_36.4 P80 BN80B4**	433
42	161	1.6	33.1	3200	**F202_33.1 S2 M2SA4**	428	**F202_33.1 P80 BN80B4**	429
44	156	2.6	32.2	4540	**F252_32.2 S2 M2SA4**	432	**F252_32.2 P80 BN80B4**	433
46	148	1.7	30.4	3140	**F202_30.4 S2 M2SA4**	428	**F202_30.4 P80 BN80B4**	429
47	144	1.0	29.6	2550	**F102_29.6 S2 M2SA4**	424	**F102_29.6 P80 BN80B4**	425
47	146	2.7	30.0	4470	**F252_30.0 S2 M2SA4**	432	**F252_30.0 P80 BN80B4**	433
51	132	3	27.2	4360	**F252_27.2 S2 M2SA4**	432	**F252_27.2 P80 BN80B4**	433
54	125	1.1	25.8	2470	**F102_25.8 S2 M2SA4**	424	**F102_25.8 P80 BN80B4**	425
54	126	1.9	25.9	3020	**F202_25.9 S2 M2SA4**	428	**F202_25.9 P80 BN80B4**	429
59	116	3.5	23.8	4210	**F252_23.8 S2 M2SA4**	432	**F252_23.8 P80 BN80B4**	433
60	113	2.1	23.1	2930	**F202_23.1 S2 M2SA4**	428	**F202_23.1 P80 BN80B4**	429
61	111	1.3	22.8	2400	**F102_22.8 S2 M2SA4**	424	**F102_22.8 P80 BN80B4**	425
69	98	2.3	20.2	2830	**F202_20.2 S2 M2SA4**	428	**F202_20.2 P80 BN80B4**	429
72	94	1.4	19.3	2310	**F102_19.3 S2 M2SA4**	424	**F102_19.3 P80 BN80B4**	425
77	88	2.4	18.1	2740	**F202_18.1 S2 M2SA4**	428	**F202_18.1 P80 BN80B4**	429
82	83	1.6	17.0	2230	**F102_17.0 S2 M2SA4**	424	**F102_17.0 P80 BN80B4**	425
95	72	2.8	14.8	2600	**F202_14.8 S2 M2SA4**	428	**F202_14.8 P80 BN80B4**	429
96	71	1.7	14.6	2150	**F102_14.6 S2 M2SA4**	424	**F102_14.6 P80 BN80B4**	425
107	63	1.6	13.0	2070	**F102_13.0 S2 M2SA4**	424	**F102_13.0 P80 BN80B4**	425
121	56	1.7	11.5	2010	**F102_11.5 S2 M2SA4**	424	**F102_11.5 P80 BN80B4**	425
125	55	3.2	11.2	2390	**F202_11.2 S2 M2SA4**	428	**F202_11.2 P80 BN80B4**	429
143	48	1.9	9.8	1920	**F102_9.8 S2 M2SA4**	424	**F102_9.8 P80 BN80B4**	425
163	42	2.0	8.6	1850	**F102_8.6 S2 M2SA4**	424	**F102_8.6 P80 BN80B4**	425
189	36	2.1	7.4	1770	**F102_7.4 S2 M2SA4**	424	**F102_7.4 P80 BN80B4**	425
192	35	2.6	14.6	1770	**F102_14.6 S1 M1LA2**	424	**F102_14.6 P80 BN80A2**	425
216	32	2.7	13.0	1710	**F102_13.0 S1 M1LA2**	424	**F102_13.0 P80 BN80A2**	425
244	28	2.8	11.5	1650	**F102_11.5 S1 M1LA2**	424	**F102_11.5 P80 BN80A2**	425
288	24	3.1	9.8	1570	**F102_9.8 S1 M1LA2**	424	**F102_9.8 P80 BN80A2**	425
327	21	3.2	8.6	1510	**F102_8.6 S1 M1LA2**	424	**F102_8.6 P80 BN80A2**	425
380	18	3.5	7.4	1440	**F102_7.4 S1 M1LA2**	424	**F102_7.4 P80 BN80A2**	425

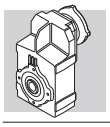

1.1 kW

n_2 min-1	M_2 Nm	S	i	R_{n2} N			IEC	
0.59	16336	0.9	1571	55000	**F904_1571 S3 M3SA6**	458	**F904_1571 P90 BN90L6**	459
0.64	14845	0.9	1428	55000	**F904_1428 S3 M3SA6**	458	**F904_1428 P90 BN90L6**	459
0.67	14338	1.0	2099	55000	**F904_2099 S2 M2SB4**	458	**F904_2099 P90 BN90S4**	459
0.72	13235	1.1	1937	55000	**F904_1937 S2 M2SB4**	458	**F904_1937 P90 BN90S4**	459
0.82	11630	1.2	1702	55000	**F904_1702 S2 M2SB4**	458	**F904_1702 P90 BN90S4**	459
0.89	10735	1.3	1571	55000	**F904_1571 S2 M2SB4**	458	**F904_1571 P90 BN90S4**	459
0.98	9755	1.4	1428	55000	**F904_1428 S2 M2SB4**	458	**F904_1428 P90 BN90S4**	459
1.1	8727	0.9	1277	45000	**F804_1277 S2 M2SB4**	455	**F804_1277 P90 BN90S4**	456
1.1	9005	1.6	1318	55000	**F904_1318 S2 M2SB4**	458	**F904_1318 P90 BN90S4**	459
1.2	7831	1.0	1146	45000	**F804_1146 S2 M2SB4**	455	**F804_1146 P90 BN90S4**	456
1.2	8232	1.7	1205	55000	**F904_1205 S2 M2SB4**	458	**F904_1205 P90 BN90S4**	459
1.3	7229	1.1	1058	45000	**F804_1058 S2 M2SB4**	455	**F804_1058 P90 BN90S4**	456
1.3	7599	1.8	1112	55000	**F904_1112 S2 M2SB4**	458	**F904_1112 P90 BN90S4**	459
1.5	6218	2.3	910.2	55000	**F904_910.2 S2 M2SB4**	458	**F904_910.2 P90 BN90S4**	459
1.6	6130	1.3	897.3	45000	**F804_897.3 S2 M2SB4**	455	**F804_897.3 P90 BN90S4**	456
1.7	5617	0.9	822.2	35000	**F704_822.2 S2 M2SB4**	452	**F704_822.2 P90 BN90S4**	453
1.8	5291	1.5	774.4	45000	**F804_774.4 S2 M2SB4**	455	**F804_774.4 P90 BN90S4**	456
1.8	5284	2.6	773.4	55000	**F904_773.4 S2 M2SB4**	458	**F904_773.4 P90 BN90S4**	459
1.9	5085	1.6	489.1	45000	**F804_489.1 S3 M3SA6**	455	**F804_489.1 P90 BN90L6**	456
1.9	5152	2.7	495.6	55000	**F904_495.6 S3 M3SA6**	458	**F904_495.6 P90 BN90L6**	459
2.0	4898	1.0	471.2	35000	**F704_471.2 S3 M3SA6**	452	**F704_471.2 P90 BN90L6**	453
2.0	4694	1.7	451.5	45000	**F804_451.5 S3 M3SA6**	455	**F804_451.5 P90 BN90L6**	456
2.0	4884	1.6	714.9	45000	**F804_714.9 S2 M2SB4**	455	**F804_714.9 P90 BN90S4**	456
2.1	4491	1.1	657.4	35000	**F704_657.4 S2 M2SB4**	452	**F704_657.4 P90 BN90S4**	453
2.2	4274	3.3	625.6	55000	**F904_625.6 S2 M2SB4**	458	**F904_625.6 P90 BN90S4**	459
2.3	4146	1.2	606.8	35000	**F704_606.8 S2 M2SB4**	452	**F704_606.8 P90 BN90S4**	453
2.3	4173	1.9	610.9	45000	**F804_610.9 S2 M2SB4**	455	**F804_610.9 P90 BN90S4**	456
2.4	3945	3.5	577.5	55000	**F904_577.5 S2 M2SB4**	458	**F904_577.5 P90 BN90S4**	459
2.5	3852	2.1	563.9	45000	**F804_563.9 S2 M2SB4**	455	**F804_563.9 P90 BN90S4**	456
2.7	3487	1.4	510.4	35000	**F704_510.4 S2 M2SB4**	452	**F704_510.4 P90 BN90S4**	453
2.9	3347	0.9	489.8	20000	**F604_489.8 S2 M2SB4**	448	**F604_489.8 P90 BN90S4**	449
2.9	3342	2.4	489.1	45000	**F804_489.1 S2 M2SB4**	455	**F804_489.1 P90 BN90S4**	456
3.0	3219	1.6	471.2	35000	**F704_471.2 S2 M2SB4**	452	**F704_471.2 P90 BN90S4**	453
3.1	3085	2.6	451.5	45000	**F804_451.5 S2 M2SB4**	455	**F804_451.5 P90 BN90S4**	456
3.2	2956	1.0	432.6	20000	**F604_432.6 S2 M2SB4**	448	**F604_432.6 P90 BN90S4**	449
3.5	2728	1.1	399.3	20000	**F604_399.3 S2 M2SB4**	448	**F604_399.3 P90 BN90S4**	449
3.5	2757	1.8	403.5	35000	**F704_403.5 S2 M2SB4**	452	**F704_403.5 P90 BN90S4**	453
3.7	2618	3.1	383.2	45000	**F804_383.2 S2 M2SB4**	455	**F804_383.2 P90 BN90S4**	456
3.8	2545	2.0	372.5	35000	**F704_372.5 S2 M2SB4**	452	**F704_372.5 P90 BN90S4**	453
4.0	2416	3.3	353.7	45000	**F804_353.7 S2 M2SB4**	455	**F804_353.7 P90 BN90S4**	456
4.1	2334	1.2	341.7	20000	**F604_341.7 S2 M2SB4**	448	**F604_341.7 P90 BN90S4**	449
4.4	2155	1.3	315.4	20000	**F604_315.4 S2 M2SB4**	448	**F604_315.4 P90 BN90S4**	449
4.6	2079	2.4	304.3	35000	**F704_304.3 S2 M2SB4**	452	**F704_304.3 P90 BN90S4**	453
4.9	1996	0.9	285.9	12000	**F513_285.9 S2 M2SB4**	444	**F513_285.9 P90 BN90S4**	445
5.0	1960	1.5	280.7	20000	**F603_280.7 S2 M2SB4**	448	**F603_280.7 P90 BN90S4**	449
5.0	1919	2.6	280.9	35000	**F704_280.9 S2 M2SB4**	452	**F704_280.9 P90 BN90S4**	453
5.3	1830	1.0	262.1	12000	**F513_262.1 S2 M2SB4**	444	**F513_262.1 P90 BN90S4**	445
5.8	1675	1.1	239.8	12000	**F513_239.8 S2 M2SB4**	444	**F513_239.8 P90 BN90S4**	445
6.0	1603	3.1	234.6	35000	**F704_234.6 S2 M2SB4**	452	**F704_234.6 P90 BN90S4**	453
6.5	1514	1.2	216.9	12000	**F513_216.9 S2 M2SB4**	444	**F513_216.9 P90 BN90S4**	445
6.5	1479	3.4	216.5	35000	**F704_216.5 S2 M2SB4**	452	**F704_216.5 P90 BN90S4**	453

1.1 kW

n_2 min-1	M_2 Nm	S	i	R_{n2} N			IEC	
6.9	1413	1.3	202.4	12000	**F513_202.4 S2 M2SB4**	444	**F513_202.4 P90 BN90S4**	445
8.3	1178	0.9	168.7	8500	**F413_168.7 S2 M2SB4**	440	**F413_168.7 P90 BN90S4**	441
8.5	1156	1.6	165.6	12000	**F513_165.6 S2 M2SB4**	444	**F513_165.6 P90 BN90S4**	445
10.4	938	1.2	134.4	8500	**F413_134.4 S2 M2SB4**	440	**F413_134.4 P90 BN90S4**	441
10.8	907	2.0	129.9	12000	**F513_129.9 S2 M2SB4**	444	**F513_129.9 P90 BN90S4**	445
13.2	740	1.5	106.0	8500	**F413_106.0 S2 M2SB4**	440	**F413_106.0 P90 BN90S4**	441
13.3	734	2.5	105.1	12000	**F513_105.1 S2 M2SB4**	444	**F513_105.1 P90 BN90S4**	445
16.0	610	1.0	87.4	6500	**F313_87.4 S2 M2SB4**	436	**F313_87.4 P90 BN90S4**	437
16.5	593	1.9	84.9	8500	**F413_84.9 S2 M2SB4**	440	**F413_84.9 P90 BN90S4**	441
16.8	581	3.1	83.2	12000	**F513_83.2 S2 M2SB4**	444	**F513_83.2 P90 BN90S4**	445
17.8	551	1.1	78.9	6500	**F313_78.9 S2 M2SB4**	436	**F313_78.9 P90 BN90S4**	437
20.3	482	1.2	69.1	6500	**F313_69.1 S2 M2SB4**	436	**F313_69.1 P90 BN90S4**	437
21.1	464	2.4	66.5	8500	**F413_66.5 S2 M2SB4**	440	**F413_66.5 P90 BN90S4**	441
22.3	438	1.4	62.8	6500	**F313_62.8 S2 M2SB4**	436	**F313_62.8 P90 BN90S4**	437
23.2	421	2.6	60.2	8500	**F413_60.2 S2 M2SB4**	440	**F413_60.2 P90 BN90S4**	441
24.0	407	1.0	58.3	4500	**F253_58.3 S2 M2SB4**	432	**F253_58.3 P90 BN90S4**	433
26.9	364	1.6	52.1	6500	**F313_52.1 S2 M2SB4**	436	**F313_52.1 P90 BN90S4**	437
27.2	360	3.0	51.5	8500	**F413_51.5 S2 M2SB4**	440	**F413_51.5 P90 BN90S4**	441
27.6	355	1.1	50.8	4450	**F253_50.8 S2 M2SB4**	432	**F253_50.8 P90 BN90S4**	433
29.2	342	3.1	47.9	8500	**F412_47.9 S2 M2SB4**	440	**F412_47.9 P90 BN90S4**	441
29.4	332	1.7	47.5	6500	**F313_47.5 S2 M2SB4**	436	**F313_47.5 P90 BN90S4**	437
31	318	1.3	45.6	4400	**F253_45.6 S2 M2SB4**	432	**F253_45.6 P90 BN90S4**	433
31	318	1.9	44.6	6500	**F312_44.6 S2 M2SB4**	436	**F312_44.6 P90 BN90S4**	437
32	317	1.2	44.4	4470	**F252_44.4 S2 M2SB4**	432	**F252_44.4 P90 BN90S4**	433
34	290	1.3	40.7	4410	**F252_40.7 S2 M2SB4**	432	**F252_40.7 P90 BN90S4**	433
35	288	2.1	40.4	6500	**F312_40.4 S2 M2SB4**	436	**F312_40.4 P90 BN90S4**	437
37	270	0.9	37.9	3050	**F202_37.9 S2 M2SB4**	428	**F202_37.9 P90 BN90S4**	429
37	269	2.2	37.7	6500	**F312_37.7 S2 M2SB4**	436	**F312_37.7 P90 BN90S4**	437
38	260	1.5	36.4	4330	**F252_36.4 S2 M2SB4**	432	**F252_36.4 P90 BN90S4**	433
41	245	2.4	34.4	6500	**F312_34.4 S2 M2SB4**	436	**F312_34.4 P90 BN90S4**	437
42	236	1.1	33.1	2980	**F202_33.1 S2 M2SB4**	428	**F202_33.1 P90 BN90S4**	429
44	230	1.7	32.2	4240	**F252_32.2 S2 M2SB4**	432	**F252_32.2 P90 BN90S4**	433
46	217	1.2	30.4	2930	**F202_30.4 S2 M2SB4**	428	**F202_30.4 P90 BN90S4**	429
46	215	2.8	30.1	6500	**F312_30.1 S2 M2SB4**	436	**F312_30.1 P90 BN90S4**	437
47	214	1.9	30.0	4190	**F252_30.0 S2 M2SB4**	432	**F252_30.0 P90 BN90S4**	433
51	194	2.1	27.2	4100	**F252_27.2 S2 M2SB4**	432	**F252_27.2 P90 BN90S4**	433
51	195	3.1	27.3	6500	**F312_27.3 S2 M2SB4**	436	**F312_27.3 P90 BN90S4**	437
54	185	1.3	25.9	2840	**F202_25.9 S2 M2SB4**	428	**F202_25.9 P90 BN90S4**	429
59	169	2.4	23.8	3990	**F252_23.8 S2 M2SB4**	432	**F252_23.8 P90 BN90S4**	433
60	165	1.4	23.1	2780	**F202_23.1 S2 M2SB4**	428	**F202_23.1 P90 BN90S4**	429
64	156	2.6	21.8	3920	**F252_21.8 S2 M2SB4**	432	**F252_21.8 P90 BN90S4**	433
69	144	1.6	20.2	2690	**F202_20.2 S2 M2SB4**	428	**F202_20.2 P90 BN90S4**	429
72	138	1.0	19.3	2170	**F102_19.3 S2 M2SB4**	424	**F102_19.3 P90 BN90S4**	425
75	133	3.0	18.6	3780	**F252_18.6 S2 M2SB4**	432	**F252_18.6 P90 BN90S4**	433
77	129	1.7	18.1	2620	**F202_18.1 S2 M2SB4**	428	**F202_18.1 P90 BN90S4**	429
82	121	1.1	17.0	2110	**F102_17.0 S2 M2SB4**	424	**F102_17.0 P90 BN90S4**	425
84	119	3.4	16.6	3670	**F252_16.6 S2 M2SB4**	432	**F252_16.6 P90 BN90S4**	433
95	106	1.9	14.8	2500	**F202_14.8 S2 M2SB4**	428	**F202_14.8 P90 BN90S4**	429
96	104	1.1	14.6	2050	**F102_14.6 S2 M2SB4**	424	**F102_14.6 P90 BN90S4**	425
107	93	1.1	13.0	1980	**F102_13.0 S2 M2SB4**	424	**F102_13.0 P90 BN90S4**	425
121	82	1.2	11.5	1920	**F102_11.5 S2 M2SB4**	424	**F102_11.5 P90 BN90S4**	425

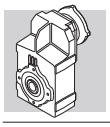

1.1 kW

n_2 min-1	M_2 Nm	S	i	R_{n2} N			IEC	
125	80	2.2	11.2	2310	**F202_11.2 S2 M2SB4**	428	**F202_11.2 P90 BN90S4**	429
143	70	1.3	9.8	1840	**F102_9.8 S2 M2SB4**	424	**F102_9.8 P90 BN90S4**	425
160	62	2.5	8.7	2160	**F202_8.7 S2 M2SB4**	428	**F202_8.7 P90 BN90S4**	429
163	61	1.3	8.6	1780	**F102_8.6 S2 M2SB4**	424	**F102_8.6 P90 BN90S4**	425
179	56	2.6	7.8	2100	**F202_7.8 S2 M2SB4**	428	**F202_7.8 P90 BN90S4**	429
189	53	1.4	7.4	1720	**F102_7.4 S2 M2SB4**	424	**F102_7.4 P90 BN90S4**	425
218	46	2.8	6.4	1980	**F202_6.4 S2 M2SB4**	428	**F202_6.4 P90 BN90S4**	429
243	41	1.9	11.5	1600	**F102_11.5 S2 M2SA2**	424	**F102_11.5 P80 BN80B2**	425
249	40	3.5	11.2	1910	**F202_11.2 S2 M2SA2**	428	**F202_11.2 P80 BN80B2**	429
287	35	2.1	9.8	1530	**F102_9.8 S2 M2SA2**	424	**F102_9.8 P80 BN80B2**	425
326	31	2.2	8.6	1480	**F102_8.6 S2 M2SA2**	424	**F102_8.6 P80 BN80B2**	425
378	26	2.4	7.4	1410	**F102_7.4 S2 M2SA2**	424	**F102_7.4 P80 BN80B2**	425

1.5 kW

n_2 min-1	M_2 Nm	S	i	R_{n2} N			IEC	
0.83	15747	0.9	1702	55000	**F904_1702 S3 M3SA4**	458	**F904_1702 P90 BN90LA4**	459
0.90	14535	1.0	1571	55000	**F904_1571 S3 M3SA4**	458	**F904_1571 P90 BN90LA4**	459
0.99	13208	1.1	1428	55000	**F904_1428 S3 M3SA4**	458	**F904_1428 P90 BN90LA4**	459
1.1	12192	1.1	1318	55000	**F904_1318 S3 M3SA4**	458	**F904_1318 P90 BN90LA4**	459
1.2	11146	1.3	1205	55000	**F904_1205 S3 M3SA4**	458	**F904_1205 P90 BN90LA4**	459
1.3	10288	1.4	1112	55000	**F904_1112 S3 M3SA4**	458	**F904_1112 P90 BN90LA4**	459
1.5	8419	1.7	910.2	55000	**F904_910.2 S3 M3SA4**	458	**F904_910.2 P90 BN90LA4**	459
1.6	8300	1.0	897.3	45000	**F804_897.3 S3 M3SA4**	455	**F804_897.3 P90 BN90LA4**	456
1.8	7164	1.1	774.4	45000	**F804_774.4 S3 M3SA4**	455	**F804_774.4 P90 BN90LA4**	456
1.8	7154	2.0	773.4	55000	**F904_773.4 S3 M3SA4**	458	**F904_773.4 P90 BN90LA4**	459
2.0	6612	1.2	714.9	45000	**F804_714.9 S3 M3SA4**	455	**F804_714.9 P90 BN90LA4**	456
2.3	5613	0.9	606.8	35000	**F704_606.8 S3 M3SA4**	452	**F704_606.8 P90 BN90LA4**	453
2.3	5651	1.4	610.9	45000	**F804_610.9 S3 M3SA4**	455	**F804_610.9 P90 BN90LA4**	456
2.3	5787	2.4	625.6	55000	**F904_625.6 S3 M3SA4**	458	**F904_625.6 P90 BN90LA4**	459
2.4	5342	2.6	577.5	55000	**F904_577.5 S3 M3SA4**	458	**F904_577.5 P90 BN90LA4**	459
2.5	5216	1.5	563.9	45000	**F804_563.9 S3 M3SA4**	455	**F804_563.9 P90 BN90LA4**	456
2.8	4721	1.1	510.4	35000	**F704_510.4 S3 M3SA4**	452	**F704_510.4 P90 BN90LA4**	453
2.8	4584	3.1	495.6	55000	**F904_495.6 S3 M3SA4**	458	**F904_495.6 P90 BN90LA4**	459
2.9	4524	1.8	489.1	45000	**F804_489.1 S3 M3SA4**	455	**F804_489.1 P90 BN90LA4**	456
3.0	4358	1.1	471.2	35000	**F704_471.2 S3 M3SA4**	452	**F704_471.2 P90 BN90LA4**	453
3.1	4176	1.9	451.5	45000	**F804_451.5 S3 M3SA4**	455	**F804_451.5 P90 BN90LA4**	456
3.1	4231	3.3	457.5	55000	**F904_457.5 S3 M3SA4**	458	**F904_457.5 P90 BN90LA4**	459
3.5	3732	1.3	403.5	35000	**F704_403.5 S3 M3SA4**	452	**F704_403.5 P90 BN90LA4**	453
3.7	3544	2.3	383.2	45000	**F804_383.2 S3 M3SA4**	455	**F804_383.2 P90 BN90LA4**	456
3.8	3445	1.5	372.5	35000	**F704_372.5 S3 M3SA4**	452	**F704_372.5 P90 BN90LA4**	453
4.0	3272	2.4	353.7	45000	**F804_353.7 S3 M3SA4**	455	**F804_353.7 P90 BN90LA4**	456
4.1	3160	0.9	341.7	20000	**F604_341.7 S3 M3SA4**	448	**F604_341.7 P90 BN90LA4**	449
4.5	2917	1.0	315.4	20000	**F604_315.4 S3 M3SA4**	448	**F604_315.4 P90 BN90LA4**	449
4.6	2815	1.8	304.3	35000	**F704_304.3 S3 M3SA4**	452	**F704_304.3 P90 BN90LA4**	453
4.8	2745	2.9	296.7	45000	**F804_296.7 S3 M3SA4**	455	**F804_296.7 P90 BN90LA4**	456
5.0	2653	1.1	280.7	20000	**F603_280.7 S3 M3SA4**	448	**F603_280.7 P90 BN90LA4**	449
5.0	2599	1.9	280.9	35000	**F704_280.9 S3 M3SA4**	452	**F704_280.9 P90 BN90LA4**	453

1.5 kW

n_2 min-1	M_2 Nm	S	i	R_{n2} N			IEC	
5.1	2534	3.2	273.9	45000	**F804_273.9 S3 M3SA4**	455	**F804_273.9 P90 BN90LA4**	456
5.4	2449	1.2	259.1	20000	**F603_259.1 S3 M3SA4**	448	**F603_259.1 P90 BN90LA4**	449
6.0	2229	1.3	235.8	20000	**F603_235.8 S3 M3SA4**	448	**F603_235.8 P90 BN90LA4**	449
6.0	2170	2.3	234.6	35000	**F704_234.6 S3 M3SA4**	452	**F704_234.6 P90 BN90LA4**	453
6.5	2057	1.4	217.6	20000	**F603_217.6 S3 M3SA4**	448	**F603_217.6 P90 BN90LA4**	449
6.5	2003	2.5	216.5	35000	**F704_216.5 S3 M3SA4**	452	**F704_216.5 P90 BN90LA4**	453
7.0	1913	0.9	202.4	12000	**F513_202.4 S3 M3SA4**	444	**F513_202.4 P90 BN90LA4**	445
7.0	1904	1.5	201.4	20000	**F603_201.4 S3 M3SA4**	448	**F603_201.4 P90 BN90LA4**	449
7.2	1853	2.7	196.0	35000	**F703_196.0 S3 M3SA4**	452	**F703_196.0 P90 BN90LA4**	453
7.6	1757	1.7	185.9	20000	**F603_185.9 S3 M3SA4**	448	**F603_185.9 P90 BN90LA4**	449
7.8	1711	2.9	180.9	35000	**F703_180.9 S3 M3SA4**	452	**F703_180.9 P90 BN90LA4**	453
8.5	1566	1.1	165.6	12000	**F513_165.6 S3 M3SA4**	444	**F513_165.6 P90 BN90LA4**	445
8.5	1576	3.2	166.7	35000	**F703_166.7 S3 M3SA4**	452	**F703_166.7 P90 BN90LA4**	453
8.7	1540	1.9	162.9	20000	**F603_162.9 S3 M3SA4**	448	**F603_162.9 P90 BN90LA4**	449
9.2	1454	3.4	153.8	35000	**F703_153.8 S3 M3SA4**	452	**F703_153.8 P90 BN90LA4**	453
9.4	1421	2.0	150.4	20000	**F603_150.4 S3 M3SA4**	448	**F603_150.4 P90 BN90LA4**	449
10.8	1234	2.4	130.5	20000	**F603_130.5 S3 M3SA4**	448	**F603_130.5 P90 BN90LA4**	449
10.9	1228	1.5	129.9	12000	**F513_129.9 S3 M3SA4**	444	**F513_129.9 P90 BN90LA4**	445
11.7	1139	2.5	120.5	20000	**F603_120.5 S3 M3SA4**	448	**F603_120.5 P90 BN90LA4**	449
13.3	1002	1.1	106.0	8500	**F413_106.0 S3 M3SA4**	440	**F413_106.0 P90 BN90LA4**	441
13.3	1006	2.9	106.4	20000	**F603_106.4 S3 M3SA4**	448	**F603_106.4 P90 BN90LA4**	449
13.4	993	1.8	105.1	12000	**F513_105.1 S3 M3SA4**	444	**F513_105.1 P90 BN90LA4**	445
14.4	928	3.1	98.2	20000	**F603_98.2 S3 M3SA4**	448	**F603_98.2 P90 BN90LA4**	449
16.6	802	1.4	84.9	8500	**F413_84.9 S3 M3SA4**	440	**F413_84.9 P90 BN90LA4**	441
16.9	787	2.3	83.2	12000	**F513_83.2 S3 M3SA4**	444	**F513_83.2 P90 BN90LA4**	445
20.4	653	0.9	69.1	6500	**F313_69.1 S3 M3SA4**	436	**F313_69.1 P90 BN90LA4**	437
21.2	629	1.7	66.5	8500	**F413_66.5 S3 M3SA4**	440	**F413_66.5 P90 BN90LA4**	441
21.4	622	2.9	65.8	12000	**F513_65.8 S3 M3SA4**	444	**F513_65.8 P90 BN90LA4**	445
22.5	593	1.0	62.8	6500	**F313_62.8 S3 M3SA4**	436	**F313_62.8 P90 BN90LA4**	437
23.4	570	1.9	60.2	8500	**F413_60.2 S3 M3SA4**	440	**F413_60.2 P90 BN90LA4**	441
27.1	492	1.2	52.1	6500	**F313_52.1 S3 M3SA4**	436	**F313_52.1 P90 BN90LA4**	437
27.4	487	2.2	51.5	8500	**F413_51.5 S3 M3SA4**	440	**F413_51.5 P90 BN90LA4**	441
29.4	463	2.3	47.9	8500	**F412_47.9 S3 M3SA4**	440	**F412_47.9 P90 BN90LA4**	441
29.7	449	1.3	47.5	6500	**F313_47.5 S3 M3SA4**	436	**F313_47.5 P90 BN90LA4**	437
31	431	0.9	45.6	3880	**F253_45.6 S3 M3SA4**	432	**F253_45.6 P90 BN90LA4**	433
32	431	1.4	44.6	6500	**F312_44.6 S3 M3SA4**	436	**F312_44.6 P90 BN90LA4**	437
35	393	1.0	40.7	3970	**F252_40.7 S3 M3SA4**	432	**F252_40.7 P90 BN90LA4**	433
35	390	1.5	40.4	6500	**F312_40.4 S3 M3SA4**	436	**F312_40.4 P90 BN90LA4**	437
37	364	1.6	37.7	6500	**F312_37.7 S3 M3SA4**	436	**F312_37.7 P90 BN90LA4**	437
37	369	3.0	38.2	8500	**F412_38.2 S3 M3SA4**	440	**F412_38.2 P90 BN90LA4**	441
39	352	1.1	36.4	3940	**F252_36.4 S3 M3SA4**	432	**F252_36.4 P90 BN90LA4**	433
41	332	1.8	34.4	6500	**F312_34.4 S3 M3SA4**	436	**F312_34.4 P90 BN90LA4**	437
44	311	1.3	32.2	3890	**F252_32.2 S3 M3SA4**	432	**F252_32.2 P90 BN90LA4**	433
47	290	1.4	30.0	3860	**F252_30.0 S3 M3SA4**	432	**F252_30.0 P90 BN90LA4**	433
47	291	2.1	30.1	6500	**F312_30.1 S3 M3SA4**	436	**F312_30.1 P90 BN90LA4**	437
52	263	1.5	27.2	3810	**F252_27.2 S3 M3SA4**	432	**F252_27.2 P90 BN90LA4**	433
52	263	2.3	27.3	6500	**F312_27.3 S3 M3SA4**	436	**F312_27.3 P90 BN90LA4**	437
54	250	1.0	25.9	2640	**F202_25.9 S3 M3SA4**	428	**F202_25.9 P90 BN90LA4**	429
59	229	1.7	23.8	3730	**F252_23.8 S3 M3SA4**	432	**F252_23.8 P90 BN90LA4**	433
60	226	2.7	23.4	6480	**F312_23.4 S3 M3SA4**	436	**F312_23.4 P90 BN90LA4**	437
61	224	1.1	23.1	2600	**F202_23.1 S3 M3SA4**	428	**F202_23.1 P90 BN90LA4**	429

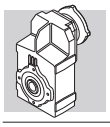

1.5 kW

n_2 min-1	M_2 Nm	S	i	R_{n2} N			IEC	
65	211	1.9	21.8	3680	**F252_21.8 S3 M3SA4**	432	**F252_21.8 P90 BN90LA4**	433
67	204	2.9	21.1	6320	**F312_21.1 S3 M3SA4**	436	**F312_21.1 P90 BN90LA4**	437
70	195	1.1	20.2	2530	**F202_20.2 S3 M3SA4**	428	**F202_20.2 P90 BN90LA4**	429
76	180	2.2	18.6	3570	**F252_18.6 S3 M3SA4**	432	**F252_18.6 P90 BN90LA4**	433
76	179	3.4	18.5	6110	**F312_18.5 S3 M3SA4**	436	**F312_18.5 P90 BN90LA4**	437
78	175	1.2	18.1	2480	**F202_18.1 S3 M3SA4**	428	**F202_18.1 P90 BN90LA4**	429
85	161	2.5	16.6	3490	**F252_16.6 S3 M3SA4**	432	**F252_16.6 P90 BN90LA4**	433
95	143	1.4	14.8	2380	**F202_14.8 S3 M3SA4**	428	**F202_14.8 P90 BN90LA4**	429
97	140	2.9	14.5	3390	**F252_14.5 S3 M3SA4**	432	**F252_14.5 P90 BN90LA4**	433
109	125	3.2	13	3310	**F252_13.0 S3 M3SA4**	432	**F252_13.0 P90 BN90LA4**	433
126	108	1.6	11.2	2220	**F202_11.2 S3 M3SA4**	428	**F202_11.2 P90 BN90LA4**	429
144	94	0.9	9.8	1760	**F102_9.8 S3 M3SA4**	424	**F102_9.8 P90 BN90LA4**	425
151	90	2.9	9.4	3070	**F252_9.4 S3 M3SA4**	432	**F252_9.4 P90 BN90LA4**	433
161	84	1.8	8.7	2090	**F202_8.7 S3 M3SA4**	428	**F202_8.7 P90 BN90LA4**	429
164	83	1.0	8.6	1710	**F102_8.6 S3 M3SA4**	424	**F102_8.6 P90 BN90LA4**	425
168	81	3.2	8.4	2980	**F252_8.4 S3 M3SA4**	432	**F252_8.4 P90 BN90LA4**	433
180	76	1.9	7.8	2030	**F202_7.8 S3 M3SA4**	428	**F202_7.8 P90 BN90LA4**	429
190	72	1.1	7.4	1650	**F102_7.4 S3 M3SA4**	424	**F102_7.4 P90 BN90LA4**	425
220	62	2.1	6.4	1930	**F202_6.4 S3 M3SA4**	428	**F202_6.4 P90 BN90LA4**	429
243	56	1.4	11.5	1560	**F102_11.5 S2 M2SB2**	424	**F102_11.5 P90 BN90SA2**	425
249	55	2.6	11.2	1860	**F202_11.2 S2 M2SB2**	428	**F202_11.2 P90 BN90SA2**	429
287	48	1.5	9.8	1490	**F102_9.8 S2 M2SB2**	424	**F102_9.8 P90 BN90SA2**	425
321	42	2.9	8.7	1740	**F202_8.7 S2 M2SB2**	428	**F202_8.7 P90 BN90SA2**	429
326	42	1.6	8.6	1440	**F102_8.6 S2 M2SB2**	424	**F102_8.6 P90 BN90SA2**	425
357	38	3.0	7.8	1680	**F202_7.8 S2 M2SB2**	428	**F202_7.8 P90 BN90SA2**	429
378	36	1.7	7.4	1380	**F102_7.4 S2 M2SB2**	424	**F102_7.4 P90 BN90SA2**	425
437	31	3.3	6.4	1590	**F202_6.4 S2 M2SB2**	428	**F202_6.4 P90 BN90SA2**	429

2.2 kW

n_2 min-1	M_2 Nm	S	i	R_{n2} N			IEC	
1.2	16347	0.9	1205	55000	**F904_1205 S3 M3LA4**	458	**F904_1205 P100 BN100LA4**	459
1.3	15090	0.9	1112	55000	**F904_1112 S3 M3LA4**	458	**F904_1112 P100 BN100LA4**	459
1.5	12348	1.1	910.2	55000	**F904_910.2 S3 M3LA4**	458	**F904_910.2 P100 BN100LA4**	459
1.8	10493	1.3	773.4	55000	**F904_773.4 S3 M3LA4**	458	**F904_773.4 P100 BN100LA4**	459
2.3	8287	1.0	610.9	45000	**F804_610.9 S3 M3LA4**	455	**F804_610.9 P100 BN100LA4**	456
2.3	8488	1.6	625.6	55000	**F904_625.6 S3 M3LA4**	458	**F904_625.6 P100 BN100LA4**	459
2.4	7835	1.8	577.5	55000	**F904_577.5 S3 M3LA4**	458	**F904_577.5 P100 BN100LA4**	459
2.5	7650	1.0	563.9	45000	**F804_563.9 S3 M3LA4**	455	**F804_563.9 P100 BN100LA4**	456
2.8	6723	2.1	495.6	55000	**F904_495.6 S3 M3LA4**	458	**F904_495.6 P100 BN100LA4**	459
2.9	6636	1.2	489.1	45000	**F804_489.1 S3 M3LA4**	455	**F804_489.1 P100 BN100LA4**	456
3.1	6125	1.3	451.5	45000	**F804_451.5 S3 M3LA4**	455	**F804_451.5 P100 BN100LA4**	456
3.1	6206	2.3	457.5	55000	**F904_457.5 S3 M3LA4**	458	**F904_457.5 P100 BN100LA4**	459
3.5	5474	0.9	403.5	35000	**F704_403.5 S3 M3LA4**	452	**F704_403.5 P100 BN100LA4**	453
3.7	5198	1.5	383.2	45000	**F804_383.2 S3 M3LA4**	455	**F804_383.2 P100 BN100LA4**	456
3.8	5053	1.0	372.5	35000	**F704_372.5 S3 M3LA4**	452	**F704_372.5 P100 BN100LA4**	453
3.9	4909	2.9	361.8	55000	**F904_361.8 S3 M3LA4**	458	**F904_361.8 P100 BN100LA4**	459
4.0	4798	1.7	353.7	45000	**F804_353.7 S3 M3LA4**	455	**F804_353.7 P100 BN100LA4**	456

2.2 kW

n_2 min-1	M_2 Nm	S	i	R_{n2} N			IEC	
4.6	4129	1.2	304.3	35000	**F704_304.3 S3 M3LA4**	452	**F704_304.3 P100 BN100LA4**	453
4.8	4025	2.0	296.7	45000	**F804_296.7 S3 M3LA4**	455	**F804_296.7 P100 BN100LA4**	456
4.8	3950	3.5	291.1	55000	**F904_291.1 S3 M3LA4**	458	**F904_291.1 P100 BN100LA4**	459
5.0	3811	1.3	280.9	35000	**F704_280.9 S3 M3LA4**	452	**F704_280.9 P100 BN100LA4**	453
5.1	3716	2.2	273.9	45000	**F804_273.9 S3 M3LA4**	455	**F804_273.9 P100 BN100LA4**	456
6.0	3182	1.6	234.6	35000	**F704_234.6 S3 M3LA4**	452	**F704_234.6 P100 BN100LA4**	453
6.5	3018	1.0	217.6	20000	**F603_217.6 S3 M3LA4**	448	**F603_217.6 P100 BN100LA4**	449
6.5	2938	1.7	216.5	35000	**F704_216.5 S3 M3LA4**	452	**F704_216.5 P100 BN100LA4**	453
6.5	2964	2.7	218.5	45000	**F804_218.5 S3 M3LA4**	455	**F804_218.5 P100 BN100LA4**	456
7.0	2792	1.0	201.4	20000	**F603_201.4 S3 M3LA4**	448	**F603_201.4 P100 BN100LA4**	449
7.2	2718	1.8	196.0	35000	**F703_196.0 S3 M3LA4**	452	**F703_196.0 P100 BN100LA4**	453
7.6	2577	1.1	185.9	20000	**F603_185.9 S3 M3LA4**	448	**F603_185.9 P100 BN100LA4**	449
7.6	2560	3.1	184.6	45000	**F803_184.6 S3 M3LA4**	455	**F803_184.6 P100 BN100LA4**	456
7.8	2509	2.0	180.9	35000	**F703_180.9 S3 M3LA4**	452	**F703_180.9 P100 BN100LA4**	453
8.5	2311	2.2	166.7	35000	**F703_166.7 S3 M3LA4**	452	**F703_166.7 P100 BN100LA4**	453
8.7	2258	1.3	162.9	20000	**F603_162.9 S3 M3LA4**	448	**F603_162.9 P100 BN100LA4**	449
9.2	2133	2.3	153.8	35000	**F703_153.8 S3 M3LA4**	452	**F703_153.8 P100 BN100LA4**	453
9.4	2085	1.4	150.4	20000	**F603_150.4 S3 M3LA4**	448	**F603_150.4 P100 BN100LA4**	449
10.6	1843	2.7	133.0	35000	**F703_133.0 S3 M3LA4**	452	**F703_133.0 P100 BN100LA4**	453
10.8	1809	1.6	130.5	20000	**F603_130.5 S3 M3LA4**	448	**F603_130.5 P100 BN100LA4**	449
10.9	1801	1.0	129.9	12000	**F513_129.9 S3 M3LA4**	444	**F513_129.9 P100 BN100LA4**	445
11.5	1702	2.9	122.7	35000	**F703_122.7 S3 M3LA4**	452	**F703_122.7 P100 BN100LA4**	453
11.7	1670	1.7	120.5	20000	**F603_120.5 S3 M3LA4**	448	**F603_120.5 P100 BN100LA4**	449
12.9	1520	3.3	109.6	35000	**F703_109.6 S3 M3LA4**	452	**F703_109.6 P100 BN100LA4**	453
13.3	1475	2.0	106.4	20000	**F603_106.4 S3 M3LA4**	448	**F603_106.4 P100 BN100LA4**	449
13.4	1457	1.2	105.1	12000	**F513_105.1 S3 M3LA4**	444	**F513_105.1 P100 BN100LA4**	445
14.4	1362	2.1	98.2	20000	**F603_98.2 S3 M3LA4**	448	**F603_98.2 P100 BN100LA4**	449
16.6	1177	0.9	84.9	8500	**F413_84.9 S3 M3LA4**	440	**F413_84.9 P100 BN100LA4**	441
16.8	1165	2.5	84.0	20000	**F603_84.0 S3 M3LA4**	448	**F603_84.0 P100 BN100LA4**	449
16.9	1154	1.6	83.2	12000	**F513_83.2 S3 M3LA4**	444	**F513_83.2 P100 BN100LA4**	445
18.2	1075	2.7	77.6	20000	**F603_77.6 S3 M3LA4**	448	**F603_77.6 P100 BN100LA4**	449
20.7	947	3.1	68.3	20000	**F603_68.3 S3 M3LA4**	448	**F603_68.3 P100 BN100LA4**	449
21.2	922	1.2	66.5	8500	**F413_66.5 S3 M3LA4**	440	**F413_66.5 P100 BN100LA4**	441
21.4	913	2.0	65.8	12000	**F513_65.8 S3 M3LA4**	444	**F513_65.8 P100 BN100LA4**	445
22.4	874	3.3	63.0	20000	**F603_63.0 S3 M3LA4**	448	**F603_63.0 P100 BN100LA4**	449
23.4	835	1.3	60.2	8500	**F413_60.2 S3 M3LA4**	440	**F413_60.2 P100 BN100LA4**	441
27.4	714	1.5	51.5	8500	**F413_51.5 S3 M3LA4**	440	**F413_51.5 P100 BN100LA4**	441
28.8	678	2.7	48.9	12000	**F513_48.9 S3 M3LA4**	444	**F513_48.9 P100 BN100LA4**	445
29.4	679	1.6	47.9	8500	**F412_47.9 S3 M3LA4**	440	**F412_47.9 P100 BN100LA4**	441
32	632	0.9	44.6	6500	**F312_44.6 S3 M3LA4**	436	**F312_44.6 P100 BN100LA4**	437
35	572	1.0	40.4	6500	**F312_40.4 S3 M3LA4**	436	**F312_40.4 P100 BN100LA4**	437
37	534	1.1	37.7	6500	**F312_37.7 S3 M3LA4**	436	**F312_37.7 P100 BN100LA4**	437
37	541	2.0	38.2	8500	**F412_38.2 S3 M3LA4**	440	**F412_38.2 P100 BN100LA4**	441
38	526	3.2	37.1	12000	**F512_37.1 S3 M3LA4**	444	**F512_37.1 P100 BN100LA4**	445
41	487	1.2	34.4	6490	**F312_34.4 S3 M3LA4**	436	**F312_34.4 P100 BN100LA4**	437
47	425	0.9	30.0	3300	**F252_30.0 S3 M3LA4**	432	**F252_30.0 P100 BN100LA4**	433
47	427	1.4	30.1	6360	**F312_30.1 S3 M3LA4**	436	**F312_30.1 P100 BN100LA4**	437
47	427	2.6	30.1	8500	**F412_30.1 S3 M3LA4**	440	**F412_30.1 P100 BN100LA4**	441
52	385	1.0	27.2	3300	**F252_27.2 S3 M3LA4**	432	**F252_27.2 P100 BN100LA4**	433
52	386	1.6	27.3	6250	**F312_27.3 S3 M3LA4**	436	**F312_27.3 P100 BN100LA4**	437
58	342	3.2	24.1	8400	**F412_24.1 S3 M3LA4**	440	**F412_24.1 P100 BN100LA4**	441

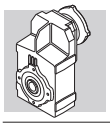

2.2 kW

n_2 min-1	M_2 Nm	S	i	R_{n2} N			IEC	
59	336	1.2	23.8	3290	**F252_23.8 S3 M3LA4**	432	**F252_23.8 P100 BN100LA4**	433
60	331	1.8	23.4	6080	**F312_23.4 S3 M3LA4**	436	**F312_23.4 P100 BN100LA4**	437
65	309	1.3	21.8	3270	**F252_21.8 S3 M3LA4**	432	**F252_21.8 P100 BN100LA4**	433
67	299	2.0	21.1	5960	**F312_21.1 S3 M3LA4**	436	**F312_21.1 P100 BN100LA4**	437
76	264	1.5	18.6	3220	**F252_18.6 S3 M3LA4**	432	**F252_18.6 P100 BN100LA4**	433
76	262	2.3	18.5	5790	**F312_18.5 S3 M3LA4**	436	**F312_18.5 P100 BN100LA4**	437
84	238	2.5	16.8	5670	**F312_16.8 S3 M3LA4**	436	**F312_16.8 P100 BN100LA4**	437
85	235	1.7	16.6	3180	**F252_16.6 S3 M3LA4**	432	**F252_16.6 P100 BN100LA4**	433
95	210	1.0	14.8	2190	**F202_14.8 S3 M3LA4**	428	**F202_14.8 P100 BN100LA4**	429
97	205	2.0	14.5	3120	**F252_14.5 S3 M3LA4**	432	**F252_14.5 P100 BN100LA4**	433
101	198	3.0	13.9	5430	**F312_13.9 S3 M3LA4**	436	**F312_13.9 P100 BN100LA4**	437
109	184	2.2	13.0	3070	**F252_13.0 S3 M3LA4**	432	**F252_13.0 P100 BN100LA4**	433
111	180	3.3	12.7	5310	**F312_12.7 S3 M3LA4**	436	**F312_12.7 P100 BN100LA4**	437
126	159	1.1	11.2	2060	**F202_11.2 S3 M3LA4**	428	**F202_11.2 P100 BN100LA4**	429
133	150	2.6	10.6	2960	**F252_10.6 S3 M3LA4**	432	**F252_10.6 P100 BN100LA4**	433
151	133	2.0	9.4	2900	**F252_9.4 S3 M3LA4**	432	**F252_9.4 P100 BN100LA4**	433
156	128	3.1	9.0	4830	**F312_9.0 S3 M3LA4**	436	**F312_9.0 P100 BN100LA4**	437
161	124	1.3	8.7	1960	**F202_8.7 S3 M3LA4**	428	**F202_8.7 P100 BN100LA4**	429
168	119	2.2	8.4	2830	**F252_8.4 S3 M3LA4**	432	**F252_8.4 P100 BN100LA4**	433
171	117	3.3	8.2	4720	**F312_8.2 S3 M3LA4**	436	**F312_8.2 P100 BN100LA4**	437
180	111	1.3	7.8	1920	**F202_7.8 S3 M3LA4**	428	**F202_7.8 P100 BN100LA4**	429
205	97	2.6	6.9	2710	**F252_6.9 S3 M3LA4**	432	**F252_6.9 P100 BN100LA4**	433
220	91	1.4	6.4	1840	**F202_6.4 S3 M3LA4**	428	**F202_6.4 P100 BN100LA4**	429
247	81	1.0	11.5	1470	**F102_11.5 S3 M3SA2**	424	**F102_11.5 P90 BN90L2**	425
254	79	1.8	11.2	1780	**F202_11.2 S3 M3SA2**	428	**F202_11.2 P90 BN90L2**	429
292	68	1.1	9.8	1410	**F102_9.8 S3 M3SA2**	424	**F102_9.8 P90 BN90L2**	425
326	61	2.0	8.7	1670	**F202_8.7 S3 M3SA2**	428	**F202_8.7 P90 BN90L2**	429
332	60	1.1	8.6	1370	**F102_8.6 S3 M3SA2**	424	**F102_8.6 P90 BN90L2**	425
364	55	2.1	7.8	1630	**F202_7.8 S3 M3SA2**	428	**F202_7.8 P90 BN90L2**	429
385	52	1.2	7.4	1330	**F102_7.4 S3 M3SA2**	424	**F102_7.4 P90 BN90L2**	425
444	45	2.3	6.4	1540	**F202_6.4 S3 M3SA2**	428	**F202_6.4 P90 BN90L2**	429

3.0 kW

n_2 min-1	M_2 Nm	S	i	R_{n2} N			IEC	
1.8	14309	1.0	773.4	55000	**F904_773.4 S3 M3LB4**	458	**F904_773.4 P100 BN100LB4**	459
2.3	11574	1.2	625.6	55000	**F904_625.6 S3 M3LB4**	458	**F904_625.6 P100 BN100LB4**	459
2.4	10684	1.3	577.5	55000	**F904_577.5 S3 M3LB4**	458	**F904_577.5 P100 BN100LB4**	459
2.8	9168	1.5	495.6	55000	**F904_495.6 S3 M3LB4**	458	**F904_495.6 P100 BN100LB4**	459
2.9	9049	0.9	489.1	45000	**F804_489.1 S3 M3LB4**	455	**F804_489.1 P100 BN100LB4**	456
3.1	8353	1.0	451.5	45000	**F804_451.5 S3 M3LB4**	455	**F804_451.5 P100 BN100LB4**	456
3.1	8463	1.7	457.5	55000	**F904_457.5 S3 M3LB4**	458	**F904_457.5 P100 BN100LB4**	459
3.7	7088	1.1	383.2	45000	**F804_383.2 S3 M3LB4**	455	**F804_383.2 P100 BN100LB4**	456
3.9	6694	2.1	361.8	55000	**F904_361.8 S3 M3LB4**	458	**F904_361.8 P100 BN100LB4**	459
4.0	6543	1.2	353.7	45000	**F804_353.7 S3 M3LB4**	455	**F804_353.7 P100 BN100LB4**	456
4.6	5630	0.9	304.3	35000	**F704_304.3 S3 M3LB4**	452	**F704_304.3 P100 BN100LB4**	453
4.8	5489	1.5	296.7	45000	**F804_296.7 S3 M3LB4**	455	**F804_296.7 P100 BN100LB4**	456
4.8	5386	2.6	291.1	55000	**F904_291.1 S3 M3LB4**	458	**F904_291.1 P100 BN100LB4**	459

3.0 kW

n_2 min-1	M_2 Nm	S	i	R_{n2} N			IEC	
5.0	5197	1.0	280.9	35000	**F704_280.9 S3 M3LB4**	452	**F704_280.9 P100 BN100LB4**	453
5.1	5067	1.6	273.9	45000	**F804_273.9 S3 M3LB4**	455	**F804_273.9 P100 BN100LB4**	456
5.2	4971	2.8	268.7	55000	**F904_268.7 S3 M3LB4**	458	**F904_268.7 P100 BN100LB4**	459
6.0	4340	1.2	234.6	35000	**F704_234.6 S3 M3LB4**	452	**F704_234.6 P100 BN100LB4**	453
6.1	4281	3.3	231.4	55000	**F904_231.4 S3 M3LB4**	458	**F904_231.4 P100 BN100LB4**	459
6.5	4006	1.2	216.5	35000	**F704_216.5 S3 M3LB4**	452	**F704_216.5 P100 BN100LB4**	453
6.5	4042	2.0	218.5	45000	**F804_218.5 S3 M3LB4**	455	**F804_218.5 P100 BN100LB4**	456
6.6	3951	3.5	213.6	55000	**F904_213.6 S3 M3LB4**	458	**F904_213.6 P100 BN100LB4**	459
7.2	3706	1.3	196.0	35000	**F703_196.0 S3 M3LB4**	452	**F703_196.0 P100 BN100LB4**	453
7.6	3490	2.3	184.6	45000	**F803_184.6 S3 M3LB4**	455	**F803_184.6 P100 BN100LB4**	456
7.8	3421	1.5	180.9	35000	**F703_180.9 S3 M3LB4**	452	**F703_180.9 P100 BN100LB4**	453
8.5	3151	1.6	166.7	35000	**F703_166.7 S3 M3LB4**	452	**F703_166.7 P100 BN100LB4**	453
8.7	3080	0.9	162.9	20000	**F603_162.9 S3 M3LB4**	448	**F603_162.9 P100 BN100LB4**	449
8.8	3029	2.6	160.2	45000	**F803_160.2 S3 M3LB4**	455	**F803_160.2 P100 BN100LB4**	456
9.2	2909	1.7	153.8	35000	**F703_153.8 S3 M3LB4**	452	**F703_153.8 P100 BN100LB4**	453
9.4	2843	1.0	150.4	20000	**F603_150.4 S3 M3LB4**	448	**F603_150.4 P100 BN100LB4**	449
9.5	2796	2.9	147.9	45000	**F803_147.9 S3 M3LB4**	455	**F803_147.9 P100 BN100LB4**	456
10.6	2514	2.0	133.0	35000	**F703_133.0 S3 M3LB4**	452	**F703_133.0 P100 BN100LB4**	453
10.6	2509	3.2	132.7	45000	**F803_132.7 S3 M3LB4**	455	**F803_132.7 P100 BN100LB4**	456
10.8	2467	1.2	130.5	20000	**F603_130.5 S3 M3LB4**	448	**F603_130.5 P100 BN100LB4**	449
11.5	2320	2.2	122.7	35000	**F703_122.7 S3 M3LB4**	452	**F703_122.7 P100 BN100LB4**	453
11.5	2316	3.5	122.5	45000	**F803_122.5 S3 M3LB4**	455	**F803_122.5 P100 BN100LB4**	456
11.7	2277	1.3	120.5	20000	**F603_120.5 S3 M3LB4**	448	**F603_120.5 P100 BN100LB4**	449
12.9	2072	2.4	109.6	35000	**F703_109.6 S3 M3LB4**	452	**F703_109.6 P100 BN100LB4**	453
13.3	2011	1.4	106.4	20000	**F603_106.4 S3 M3LB4**	448	**F603_106.4 P100 BN100LB4**	449
13.4	1987	0.9	105.1	12000	**F513_105.1 S3 M3LB4**	444	**F513_105.1 P100 BN100LB4**	445
13.9	1913	2.6	101.2	35000	**F703_101.2 S3 M3LB4**	452	**F703_101.2 P100 BN100LB4**	453
14.4	1857	1.6	98.2	20000	**F603_98.2 S3 M3LB4**	448	**F603_98.2 P100 BN100LB4**	449
15.2	1749	2.9	92.5	35000	**F703_92.5 S3 M3LB4**	452	**F703_92.5 P100 BN100LB4**	453
16.5	1614	3.1	85.4	35000	**F703_85.4 S3 M3LB4**	452	**F703_85.4 P100 BN100LB4**	453
16.8	1588	1.8	84.0	20000	**F603_84.0 S3 M3LB4**	448	**F603_84.0 P100 BN100LB4**	449
16.9	1574	1.1	83.2	12000	**F513_83.2 S3 M3LB4**	444	**F513_83.2 P100 BN100LB4**	445
18.2	1466	2.0	77.6	20000	**F603_77.6 S3 M3LB4**	448	**F603_77.6 P100 BN100LB4**	449
20.7	1291	2.2	68.3	20000	**F603_68.3 S3 M3LB4**	448	**F603_68.3 P100 BN100LB4**	449
21.4	1245	1.4	65.8	12000	**F513_65.8 S3 M3LB4**	444	**F513_65.8 P100 BN100LB4**	445
22.4	1192	2.4	63.0	20000	**F603_63.0 S3 M3LB4**	448	**F603_63.0 P100 BN100LB4**	449
23.4	1139	1.0	60.2	8500	**F413_60.2 S3 M3LB4**	440	**F413_60.2 P100 BN100LB4**	441
27.2	980	3.0	51.8	20000	**F603_51.8 S3 M3LB4**	448	**F603_51.8 P100 BN100LB4**	449
27.4	974	1.1	51.5	8500	**F413_51.5 S3 M3LB4**	440	**F413_51.5 P100 BN100LB4**	441
28.8	925	1.9	48.9	12000	**F513_48.9 S3 M3LB4**	444	**F513_48.9 P100 BN100LB4**	445
29.4	926	1.2	47.9	8500	**F412_47.9 S3 M3LB4**	440	**F412_47.9 P100 BN100LB4**	441
29.5	905	3.2	47.8	20000	**F603_47.8 S3 M3LB4**	448	**F603_47.8 P100 BN100LB4**	449
37	737	1.5	38.2	8500	**F412_38.2 S3 M3LB4**	440	**F412_38.2 P100 BN100LB4**	441
38	717	2.4	37.1	11800	**F512_37.1 S3 M3LB4**	444	**F512_37.1 P100 BN100LB4**	445
41	664	0.9	34.4	5810	**F312_34.4 S3 M3LB4**	436	**F312_34.4 P100 BN100LB4**	437
47	582	1.0	30.1	5770	**F312_30.1 S3 M3LB4**	436	**F312_30.1 P100 BN100LB4**	437
47	582	1.9	30.1	8290	**F412_30.1 S3 M3LB4**	440	**F412_30.1 P100 BN100LB4**	441
47	580	2.9	30.0	11200	**F512_30.0 S3 M3LB4**	444	**F512_30.0 P100 BN100LB4**	445
52	527	1.1	27.3	5720	**F312_27.3 S3 M3LB4**	436	**F312_27.3 P100 BN100LB4**	437
58	466	2.4	24.1	7960	**F412_24.1 S3 M3LB4**	440	**F412_24.1 P100 BN100LB4**	441
60	452	1.3	23.4	5620	**F312_23.4 S3 M3LB4**	436	**F312_23.4 P100 BN100LB4**	437

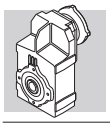

3.0 kW

n_2 min-1	M_2 Nm	S	i	R_{n2} N			IEC	
65	421	0.9	21.8	2800	**F252_21.8 S3 M3LB4**	432	**F252_21.8 P100 BN100LB4**	433
67	408	1.5	21.1	5540	**F312_21.1 S3 M3LB4**	436	**F312_21.1 P100 BN100LB4**	437
75	365	3.0	18.9	7560	**F412_18.9 S3 M3LB4**	440	**F412_18.9 P100 BN100LB4**	441
76	359	1.1	18.6	2830	**F252_18.6 S3 M3LB4**	432	**F252_18.6 P100 BN100LB4**	433
76	357	1.7	18.5	5430	**F312_18.5 S3 M3LB4**	436	**F312_18.5 P100 BN100LB4**	437
82	331	3.2	17.1	7400	**F412_17.1 S3 M3LB4**	440	**F412_17.1 P100 BN100LB4**	441
84	324	1.8	16.8	5340	**F312_16.8 S3 M3LB4**	436	**F312_16.8 P100 BN100LB4**	437
85	321	1.2	16.6	2830	**F252_16.6 S3 M3LB4**	432	**F252_16.6 P100 BN100LB4**	433
97	279	1.4	14.5	2810	**F252_14.5 S3 M3LB4**	432	**F252_14.5 P100 BN100LB4**	433
101	269	2.2	13.9	5150	**F312_13.9 S3 M3LB4**	436	**F312_13.9 P100 BN100LB4**	437
109	251	1.6	13	2790	**F252_13.0 S3 M3LB4**	432	**F252_13.0 P100 BN100LB4**	433
111	246	2.4	12.7	5060	**F312_12.7 S3 M3LB4**	436	**F312_12.7 P100 BN100LB4**	437
131	208	2.9	10.7	4880	**F312_10.7 S3 M3LB4**	436	**F312_10.7 P100 BN100LB4**	437
133	205	1.9	10.6	2730	**F252_10.6 S3 M3LB4**	432	**F252_10.6 P100 BN100LB4**	433
151	181	1.5	9.4	2710	**F252_9.4 S3 M3LB4**	432	**F252_9.4 P100 BN100LB4**	433
156	174	2.2	9.0	4650	**F312_9.0 S3 M3LB4**	436	**F312_9.0 P100 BN100LB4**	437
161	169	0.9	8.7	1820	**F202_8.7 S3 M3LB4**	428	**F202_8.7 P100 BN100LB4**	429
168	162	1.6	8.4	2660	**F252_8.4 S3 M3LB4**	432	**F252_8.4 P100 BN100LB4**	433
171	159	2.5	8.2	4550	**F312_8.2 S3 M3LB4**	436	**F312_8.2 P100 BN100LB4**	437
180	151	1.0	7.8	1790	**F202_7.8 S3 M3LB4**	428	**F202_7.8 P100 BN100LB4**	429
203	134	2.9	6.9	4360	**F312_6.9 S3 M3LB4**	436	**F312_6.9 P100 BN100LB4**	437
205	133	1.9	6.9	2560	**F252_6.9 S3 M3LB4**	432	**F252_6.9 P100 BN100LB4**	433
220	124	1.0	6.4	1730	**F202_6.4 S3 M3LB4**	428	**F202_6.4 P100 BN100LB4**	429
220	124	2.9	13.0	2510	**F252_13.0 S3 M3LA2**	432	**F252_13.0 P100 BN100L2**	433
255	107	1.3	11.2	1680	**F202_11.2 S3 M3LA2**	428	**F202_11.2 P100 BN100L2**	429
269	101	3.2	10.6	2410	**F252_10.6 S3 M3LA2**	432	**F252_10.6 P100 BN100L2**	433
306	89	3.0	9.4	2350	**F252_9.4 S3 M3LA2**	432	**F252_9.4 P100 BN100L2**	433
328	83	1.5	8.7	1600	**F202_8.7 S3 M3LA2**	428	**F202_8.7 P100 BN100L2**	429
341	80	3.3	8.4	2290	**F252_8.4 S3 M3LA2**	432	**F252_8.4 P100 BN100L2**	433
365	75	1.5	7.8	1560	**F202_7.8 S3 M3LA2**	428	**F202_7.8 P100 BN100L2**	429
446	61	1.7	6.4	1480	**F202_6.4 S3 M3LA2**	428	**F202_6.4 P100 BN100L2**	429

4.0 kW

n_2 min-1	M_2 Nm	S	i	R_{n2} N			IEC	
2.2	15542	0.9	625.6	55000	**F904_625.6 S3 M3LC4**	458	**F904_625.6 P112 BN112M4**	459
2.4	14347	1.0	577.5	55000	**F904_577.5 S3 M3LC4**	458	**F904_577.5 P112 BN112M4**	459
2.8	12311	1.1	495.6	55000	**F904_495.6 S3 M3LC4**	458	**F904_495.6 P112 BN112M4**	459
3.1	11364	1.2	457.5	55000	**F904_457.5 S3 M3LC4**	458	**F904_457.5 P112 BN112M4**	459
3.9	8989	1.6	361.8	55000	**F904_361.8 S3 M3LC4**	458	**F904_361.8 P112 BN112M4**	459
4.0	8786	0.9	353.7	45000	**F804_353.7 S3 M3LC4**	455	**F804_353.7 P112 BN112M4**	456
4.7	7371	1.1	296.7	45000	**F804_296.7 S3 M3LC4**	455	**F804_296.7 P112 BN112M4**	456
4.8	7232	1.9	291.1	55000	**F904_291.1 S3 M3LC4**	458	**F904_291.1 P112 BN112M4**	459
5.1	6804	1.2	273.9	45000	**F804_273.9 S3 M3LC4**	455	**F804_273.9 P112 BN112M4**	456
5.2	6676	2.1	268.7	55000	**F904_268.7 S3 M3LC4**	458	**F904_268.7 P112 BN112M4**	459
6.0	5827	0.9	234.6	35000	**F704_234.6 S3 M3LC4**	452	**F704_234.6 P112 BN112M4**	453
6.1	5748	2.4	231.4	55000	**F904_231.4 S3 M3LC4**	458	**F904_231.4 P112 BN112M4**	459
6.4	5428	1.5	218.5	45000	**F804_218.5 S3 M3LC4**	455	**F804_218.5 P112 BN112M4**	456

4.0 kW

n_2 min-1	M_2 Nm	S	i	R_{n2} N			IEC	
6.5	5379	0.9	216.5	35000	**F704_216.5 S3 M3LC4**	452	**F704_216.5 P112 BN112M4**	453
6.6	5306	2.6	213.6	55000	**F904_213.6 S3 M3LC4**	458	**F904_213.6 P112 BN112M4**	459
7.1	4977	1.0	196.0	35000	**F703_196.0 S3 M3LC4**	452	**F703_196.0 P112 BN112M4**	453
7.2	4929	2.8	194.2	55000	**F903_194.2 S3 M3LC4**	458	**F903_194.2 P112 BN112M4**	459
7.6	4687	1.7	184.6	45000	**F803_184.6 S3 M3LC4**	455	**F803_184.6 P112 BN112M4**	456
7.7	4594	1.1	180.9	35000	**F703_180.9 S3 M3LC4**	452	**F703_180.9 P112 BN112M4**	453
7.8	4550	3.1	179.2	55000	**F903_179.2 S3 M3LC4**	458	**F903_179.2 P112 BN112M4**	459
8.4	4232	1.2	166.7	35000	**F703_166.7 S3 M3LC4**	452	**F703_166.7 P112 BN112M4**	453
8.6	4134	3.4	162.8	55000	**F903_162.8 S3 M3LC4**	458	**F903_162.8 P112 BN112M4**	459
8.7	4068	2.0	160.2	45000	**F803_160.2 S3 M3LC4**	455	**F803_160.2 P112 BN112M4**	456
9.1	3906	1.3	153.8	35000	**F703_153.8 S3 M3LC4**	452	**F703_153.8 P112 BN112M4**	453
9.5	3755	2.1	147.9	45000	**F803_147.9 S3 M3LC4**	455	**F803_147.9 P112 BN112M4**	456
10.5	3376	1.5	133.0	35000	**F703_133.0 S3 M3LC4**	452	**F703_133.0 P112 BN112M4**	453
10.6	3369	2.4	132.7	45000	**F803_132.7 S3 M3LC4**	455	**F803_132.7 P112 BN112M4**	456
11.4	3116	1.6	122.7	35000	**F703_122.7 S3 M3LC4**	452	**F703_122.7 P112 BN112M4**	453
11.4	3110	2.6	122.5	45000	**F803_122.5 S3 M3LC4**	455	**F803_122.5 P112 BN112M4**	456
11.6	3058	0.9	120.5	20000	**F603_120.5 S3 M3LC4**	448	**F603_120.5 P112 BN112M4**	449
12.3	2888	2.8	113.8	45000	**F803_113.8 S3 M3LC4**	455	**F803_113.8 P112 BN112M4**	456
12.8	2783	1.8	109.6	35000	**F703_109.6 S3 M3LC4**	452	**F703_109.6 P112 BN112M4**	453
13.2	2701	1.1	106.4	20000	**F603_106.4 S3 M3LC4**	448	**F603_106.4 P112 BN112M4**	449
13.8	2569	1.9	101.2	35000	**F703_101.2 S3 M3LC4**	452	**F703_101.2 P112 BN112M4**	453
14.3	2493	1.2	98.2	20000	**F603_98.2 S3 M3LC4**	448	**F603_98.2 P112 BN112M4**	449
15.1	2348	2.1	92.5	35000	**F703_92.5 S3 M3LC4**	452	**F703_92.5 P112 BN112M4**	453
16.4	2168	2.3	85.4	35000	**F703_85.4 S3 M3LC4**	452	**F703_85.4 P112 BN112M4**	453
16.7	2133	1.4	84.0	20000	**F603_84.0 S3 M3LC4**	448	**F603_84.0 P112 BN112M4**	449
18.1	1969	1.5	77.6	20000	**F603_77.6 S3 M3LC4**	448	**F603_77.6 P112 BN112M4**	449
20.5	1734	1.7	68.3	20000	**F603_68.3 S3 M3LC4**	448	**F603_68.3 P112 BN112M4**	449
21.3	1672	1.1	65.8	12000	**F513_65.8 S3 M3LC4**	444	**F513_65.8 P112 BN112M4**	445
22.2	1600	1.8	63.0	20000	**F603_63.0 S3 M3LC4**	448	**F603_63.0 P112 BN112M4**	449
27.0	1316	2.2	51.8	20000	**F603_51.8 S3 M3LC4**	448	**F603_51.8 P112 BN112M4**	449
28.6	1242	1.4	48.9	11600	**F513_48.9 S3 M3LC4**	444	**F513_48.9 P112 BN112M4**	445
29.3	1215	2.4	47.8	20000	**F603_47.8 S3 M3LC4**	448	**F603_47.8 P112 BN112M4**	449
33	1069	2.7	42.1	20000	**F603_42.1 S3 M3LC4**	448	**F603_42.1 P112 BN112M4**	449
36	986	2.9	38.8	20000	**F603_38.8 S3 M3LC4**	448	**F603_38.8 P112 BN112M4**	449
37	990	1.1	38.2	7720	**F412_38.2 S3 M3LC4**	440	**F412_38.2 P112 BN112M4**	441
38	963	1.8	37.1	11200	**F512_37.1 S3 M3LC4**	444	**F512_37.1 P112 BN112M4**	445
46	781	1.4	30.1	7610	**F412_30.1 S3 M3LC4**	440	**F412_30.1 P112 BN112M4**	441
47	779	2.2	30.0	10700	**F512_30.0 S3 M3LC4**	444	**F512_30.0 P112 BN112M4**	445
55	645	2.9	25.4	20000	**F603_25.4 S3 M3LC4**	448	**F603_25.4 P112 BN112M4**	449
58	625	1.8	24.1	7420	**F412_24.1 S3 M3LC4**	440	**F412_24.1 P112 BN112M4**	441
59	617	2.7	23.8	10200	**F512_23.8 S3 M3LC4**	444	**F512_23.8 P112 BN112M4**	445
60	607	1.0	23.4	5040	**F312_23.4 S3 M3LC4**	436	**F312_23.4 P112 BN112M4**	437
60	596	3.2	23.5	20000	**F603_23.5 S3 M3LC4**	448	**F603_23.5 P112 BN112M4**	449
66	548	1.1	21.1	5020	**F312_21.1 S3 M3LC4**	436	**F312_21.1 P112 BN112M4**	437
74	490	2.2	18.9	7150	**F412_18.9 S3 M3LC4**	440	**F412_18.9 P112 BN112M4**	441
74	488	3.2	18.8	9640	**F512_18.8 S3 M3LC4**	444	**F512_18.8 P112 BN112M4**	445
76	479	1.3	18.5	4980	**F312_18.5 S3 M3LC4**	436	**F312_18.5 P112 BN112M4**	437
82	444	2.4	17.1	7030	**F412_17.1 S3 M3LC4**	440	**F412_17.1 P112 BN112M4**	441
83	436	1.4	16.8	4930	**F312_16.8 S3 M3LC4**	436	**F312_16.8 P112 BN112M4**	437
84	431	0.9	16.6	2380	**F252_16.6 S3 M3LC4**	432	**F252_16.6 P112 BN112M4**	433
96	379	2.7	14.6	6820	**F412_14.6 S3 M3LC4**	440	**F412_14.6 P112 BN112M4**	441

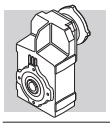

4.0 kW

n_2 min-1	M_2 Nm	S	i	R_{n2} N			IEC	
97	375	1.1	14.5	2420	**F252_14.5 S3 M3LC4**	432	**F252_14.5 P112 BN112M4**	433
100	362	1.7	13.9	4820	**F312_13.9 S3 M3LC4**	436	**F312_13.9 P112 BN112M4**	437
108	337	1.2	13.0	2440	**F252_13.0 S3 M3LC4**	432	**F252_13.0 P112 BN112M4**	433
110	330	1.8	12.7	4750	**F312_12.7 S3 M3LC4**	436	**F312_12.7 P112 BN112M4**	437
130	279	2.2	10.7	4620	**F312_10.7 S3 M3LC4**	436	**F312_10.7 P112 BN112M4**	437
130	279	3.2	10.8	6380	**F412_10.8 S3 M3LC4**	440	**F412_10.8 P112 BN112M4**	441
132	276	1.4	10.6	2450	**F252_10.6 S3 M3LC4**	432	**F252_10.6 P112 BN112M4**	433
150	243	1.1	9.4	2470	**F252_9.4 S3 M3LC4**	432	**F252_9.4 P112 BN112M4**	433
153	237	3.0	9.1	6160	**F412_9.1 S3 M3LC4**	440	**F412_9.1 P112 BN112M4**	441
155	234	1.7	9.0	4420	**F312_9.0 S3 M3LC4**	436	**F312_9.0 P112 BN112M4**	437
167	218	1.2	8.4	2450	**F252_8.4 S3 M3LC4**	432	**F252_8.4 P112 BN112M4**	433
170	213	1.8	8.2	4350	**F312_8.2 S3 M3LC4**	436	**F312_8.2 P112 BN112M4**	437
201	180	2.2	6.9	4200	**F312_6.9 S3 M3LC4**	436	**F312_6.9 P112 BN112M4**	437
204	178	1.4	6.9	2390	**F252_6.9 S3 M3LC4**	432	**F252_6.9 P112 BN112M4**	433
206	176	3.2	13.9	4200	**F312_13.9 S3 M3LB2**	436	**F312_13.9 P100 BN100LB2**	437
221	164	2.2	13.0	2340	**F252_13.0 S3 M3LB2**	432	**F252_13.0 P112 BN112M2**	433
226	161	3.4	12.7	4120	**F312_12.7 S3 M3LB2**	436	**F312_12.7 P100 BN100LB2**	437
255	142	1.0	11.2	1570	**F202_11.2 S3 M3LB2**	428	**F202_11.2 P100 BN100LB2**	429
270	134	2.4	10.6	2270	**F252_10.6 S3 M3LB2**	432	**F252_10.6 P112 BN112M2**	433
307	118	2.2	9.4	2230	**F252_9.4 S3 M3LB2**	432	**F252_9.4 P112 BN112M2**	433
318	114	3.4	9.0	3760	**F312_9.0 S3 M3LB2**	436	**F312_9.0 P100 BN100LB2**	437
329	110	1.1	8.7	1510	**F202_8.7 S3 M3LB2**	428	**F202_8.7 P100 BN100LB2**	429
342	106	2.4	8.4	2190	**F252_8.4 S3 M3LB2**	432	**F252_8.4 P112 BN112M2**	433
366	99	1.2	7.8	1480	**F202_7.8 S3 M3LB2**	428	**F202_7.8 P100 BN100LB2**	429
418	87	2.7	6.9	2090	**F252_6.9 S3 M3LB2**	432	**F252_6.9 P112 BN112M2**	433
448	81	1.3	6.4	1420	**F202_6.4 S3 M3LB2**	428	**F202_6.4 P100 BN100LB2**	429

5.5 kW

n_2 min-1	M_2 Nm	S	i	R_{n2} N			IEC	
2.9	16458	0.9	495.6	55000	**F904_495.6 S4 M4SA4**	458	**F904_495.6 P132 BN132S4**	459
3.1	15192	0.9	457.5	55000	**F904_457.5 S4 M4SA4**	458	**F904_457.5 P132 BN132S4**	459
4.0	12017	1.2	361.8	55000	**F904_361.8 S4 M4SA4**	458	**F904_361.8 P132 BN132S4**	459
4.9	9668	1.4	291.1	55000	**F904_291.1 S4 M4SA4**	458	**F904_291.1 P132 BN132S4**	459
5.3	9096	0.9	273.9	45000	**F804_273.9 S4 M4SA4**	455	**F804_273.9 P132 BN132S4**	456
5.4	8925	1.6	268.7	55000	**F904_268.7 S4 M4SA4**	458	**F904_268.7 P132 BN132S4**	459
6.2	7685	1.8	231.4	55000	**F904_231.4 S4 M4SA4**	458	**F904_231.4 P132 BN132S4**	459
6.6	7256	1.1	218.5	45000	**F804_218.5 S4 M4SA4**	455	**F804_218.5 P132 BN132S4**	456
6.7	7093	2	213.6	55000	**F904_213.6 S4 M4SA4**	458	**F904_213.6 P132 BN132S4**	459
7.4	6590	2.1	194.2	55000	**F903_194.2 S4 M4SA4**	458	**F903_194.2 P132 BN132S4**	459
7.8	6266	1.3	184.6	45000	**F803_184.6 S4 M4SA4**	455	**F803_184.6 P132 BN132S4**	456
8.0	6083	2.3	179.2	55000	**F903_179.2 S4 M4SA4**	458	**F903_179.2 P132 BN132S4**	459
8.8	5527	2.5	162.8	55000	**F903_162.8 S4 M4SA4**	458	**F903_162.8 P132 BN132S4**	459
9.0	5438	1.5	160.2	45000	**F803_160.2 S4 M4SA4**	455	**F803_160.2 P132 BN132S4**	456
9.4	5222	1.0	153.8	35000	**F703_153.8 S4 M4SA4**	452	**F703_153.8 P132 BN132S4**	453
9.6	5101	2.7	150.3	55000	**F903_150.3 S4 M4SA4**	458	**F903_150.3 P132 BN132S4**	459
9.7	5020	1.6	147.9	45000	**F803_147.9 S4 M4SA4**	455	**F803_147.9 P132 BN132S4**	456
10.5	4661	3.0	137.3	55000	**F903_137.3 S4 M4SA4**	458	**F903_137.3 P132 BN132S4**	459

5.5 kW

n_2 min-1	M_2 Nm	S	i	R_{n2} N			IEC	
10.8	4513	1.1	133	35000	**F703_133.0 S4 M4SA4**	452	**F703_133.0 P132 BN132S4**	453
10.9	4504	1.8	132.7	45000	**F803_132.7 S4 M4SA4**	455	**F803_132.7 P132 BN132S4**	456
11.4	4303	3.3	126.8	55000	**F903_126.8 S4 M4SA4**	458	**F903_126.8 P132 BN132S4**	459
11.7	4165	1.2	122.7	35000	**F703_122.7 S4 M4SA4**	452	**F703_122.7 P132 BN132S4**	453
11.8	4157	1.9	122.5	45000	**F803_122.5 S4 M4SA4**	455	**F803_122.5 P132 BN132S4**	456
12.7	3861	2.1	113.8	45000	**F803_113.8 S4 M4SA4**	455	**F803_113.8 P132 BN132S4**	456
13.1	3720	1.3	109.6	35000	**F703_109.6 S4 M4SA4**	452	**F703_109.6 P132 BN132S4**	453
14.2	3434	1.5	101.2	35000	**F703_101.2 S4 M4SA4**	452	**F703_101.2 P132 BN132S4**	453
15.6	3139	1.6	92.5	35000	**F703_92.5 S4 M4SA4**	452	**F703_92.5 P132 BN132S4**	453
15.6	3133	2.6	92.3	45000	**F803_92.3 S4 M4SA4**	455	**F803_92.3 P132 BN132S4**	456
16.9	2898	1.7	85.4	35000	**F703_85.4 S4 M4SA4**	452	**F703_85.4 P132 BN132S4**	453
16.9	2892	2.8	85.2	45000	**F803_85.2 S4 M4SA4**	455	**F803_85.2 P132 BN132S4**	456
17.1	2852	1.0	84	20000	**F603_84.0 S4 M4SA4**	448	**F603_84.0 P132 BN132S4**	449
18.6	2632	1.1	77.6	20000	**F603_77.6 S4 M4SA4**	448	**F603_77.6 P132 BN132S4**	449
18.9	2588	3.1	76.3	45000	**F803_76.3 S4 M4SA4**	455	**F803_76.3 P132 BN132S4**	456
19.6	2497	2.0	73.6	35000	**F703_73.6 S4 M4SA4**	452	**F703_73.6 P132 BN132S4**	453
20.5	2389	3.3	70.4	45000	**F803_70.4 S4 M4SA4**	455	**F803_70.4 P132 BN132S4**	456
21.1	2317	1.3	68.3	20000	**F603_68.3 S4 M4SA4**	448	**F603_68.3 P132 BN132S4**	449
21.2	2305	2.2	67.9	35000	**F703_67.9 S4 M4SA4**	452	**F703_67.9 P132 BN132S4**	453
22.8	2139	1.4	63	20000	**F603_63.0 S4 M4SA4**	448	**F603_63.0 P132 BN132S4**	449
23.0	2121	2.4	62.5	35000	**F703_62.5 S4 M4SA4**	452	**F703_62.5 P132 BN132S4**	453
25.0	1958	2.6	57.7	35000	**F703_57.7 S4 M4SA4**	452	**F703_57.7 P132 BN132S4**	453
27.8	1759	1.6	51.8	20000	**F603_51.8 S4 M4SA4**	448	**F603_51.8 P132 BN132S4**	449
29.4	1660	1.1	48.9	10300	**F513_48.9 S4 M4SA4**	444	**F513_48.9 P132 BN132S4**	445
29.4	1662	3	49.0	35000	**F703_49.0 S4 M4SA4**	452	**F703_49.0 P132 BN132S4**	453
30.0	1624	1.8	47.8	20000	**F603_47.8 S4 M4SA4**	448	**F603_47.8 P132 BN132S4**	449
32	1534	3.3	45.2	34300	**F703_45.2 S4 M4SA4**	452	**F703_45.2 P132 BN132S4**	453
34	1428	2.0	42.1	20000	**F603_42.1 S4 M4SA4**	448	**F603_42.1 P132 BN132S4**	449
37	1319	2.2	38.8	20000	**F603_38.8 S4 M4SA4**	448	**F603_38.8 P132 BN132S4**	449
39	1288	1.3	37.1	10300	**F512_37.1 S4 M4SA4**	444	**F512_37.1 P132 BN132S4**	445
45	1089	2.7	32.1	20000	**F603_32.1 S4 M4SA4**	448	**F603_32.1 P132 BN132S4**	449
48	1044	1.1	30.1	6580	**F412_30.1 S4 M4SA4**	440	**F412_30.1 P132 BN132S4**	441
48	1041	1.6	30	9950	**F512_30.0 S4 M4SA4**	444	**F512_30.0 P132 BN132S4**	445
49	1005	2.9	29.6	20000	**F603_29.6 S4 M4SA4**	448	**F603_29.6 P132 BN132S4**	449
57	863	2.2	25.4	20000	**F603_25.4 S4 M4SA4**	448	**F603_25.4 P132 BN132S4**	449
60	836	1.3	24.1	6580	**F412_24.1 S4 M4SA4**	440	**F412_24.1 P132 BN132S4**	441
61	825	2.0	23.8	9560	**F512_23.8 S4 M4SA4**	444	**F512_23.8 P132 BN132S4**	445
61	796	2.4	23.5	20000	**F603_23.5 S4 M4SA4**	448	**F603_23.5 P132 BN132S4**	449
70	701	2.7	20.7	20000	**F603_20.7 S4 M4SA4**	448	**F603_20.7 P132 BN132S4**	449
76	655	1.7	18.9	6480	**F412_18.9 S4 M4SA4**	440	**F412_18.9 P132 BN132S4**	441
76	647	2.9	19.1	20000	**F603_19.1 S4 M4SA4**	448	**F603_19.1 P132 BN132S4**	449
77	653	2.4	18.8	9110	**F512_18.8 S4 M4SA4**	444	**F512_18.8 P132 BN132S4**	445
84	593	1.8	17.1	6410	**F412_17.1 S4 M4SA4**	440	**F412_17.1 P132 BN132S4**	441
98	507	2.0	14.6	6280	**F412_14.6 S4 M4SA4**	440	**F412_14.6 P132 BN132S4**	441
103	485	2.9	14.0	8520	**F512_14.0 S4 M4SA4**	444	**F512_14.0 P132 BN132S4**	445
130	385	3.5	11.1	8050	**F512_11.1 S4 M4SA4**	444	**F512_11.1 P132 BN132S4**	445
134	373	2.4	10.8	5970	**F412_10.8 S4 M4SA4**	440	**F412_10.8 P132 BN132S4**	441
158	317	2.2	9.1	5810	**F412_9.1 S4 M4SA4**	440	**F412_9.1 P132 BN132S4**	441
159	314	3.5	9.1	7590	**F512_9.1 S4 M4SA4**	444	**F512_9.1 P132 BN132S4**	445
198	253	3.3	14.6	5510	**F412_14.6 S4 M4SA2**	440	**F412_14.6 P132 BN132SA2**	441
214	233	2.7	6.7	5430	**F412_6.7 S4 M4SA4**	440	**F412_6.7 P132 BN132S4**	441

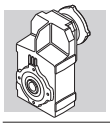

5.5 kW

n_2 min-1	M_2 Nm	S	i	R_{n2} N			IEC	
268	186	3.9	10.8	5120	**F412_10.8 S4 M4SA2**	440	**F412_10.8 P132 BN132SA2**	441
316	158	3.9	9.1	4930	**F412_9.1 S4 M4SA2**	440	**F412_9.1 P132 BN132SA2**	441

7.5 kW

n_2 min-1	M_2 Nm	S	i	R_{n2} N			IEC	
4.0	16387	0.9	361.8	55000	**F904_361.8 S4 M4LA4**	458	**F904_361.8 P132 BN132MA4**	459
4.9	13184	1.1	291.1	55000	**F904_291.1 S4 M4LA4**	458	**F904_291.1 P132 BN132MA4**	459
5.4	12170	1.2	268.7	55000	**F904_268.7 S4 M4LA4**	458	**F904_268.7 P132 BN132MA4**	459
6.2	10479	1.3	231.4	55000	**F904_231.4 S4 M4LA4**	458	**F904_231.4 P132 BN132MA4**	459
6.7	9673	1.4	213.6	55000	**F904_213.6 S4 M4LA4**	458	**F904_213.6 P132 BN132MA4**	459
7.4	8986	1.6	194.2	55000	**F903_194.2 S4 M4LA4**	458	**F903_194.2 P132 BN132MA4**	459
7.8	8544	0.9	184.6	45000	**F803_184.6 S4 M4LA4**	455	**F803_184.6 P132 BN132MA4**	456
8.0	8295	1.7	179.2	55000	**F903_179.2 S4 M4LA4**	458	**F903_179.2 P132 BN132MA4**	459
8.8	7536	1.9	162.8	55000	**F903_162.8 S4 M4LA4**	458	**F903_162.8 P132 BN132MA4**	459
9.0	7416	1.1	160.2	45000	**F803_160.2 S4 M4LA4**	455	**F803_160.2 P132 BN132MA4**	456
9.6	6956	2	150.3	55000	**F903_150.3 S4 M4LA4**	458	**F903_150.3 P132 BN132MA4**	459
9.7	6845	1.2	147.9	45000	**F803_147.9 S4 M4LA4**	455	**F803_147.9 P132 BN132MA4**	456
10.5	6356	2.2	137.3	55000	**F903_137.3 S4 M4LA4**	458	**F903_137.3 P132 BN132MA4**	459
10.9	6141	1.3	132.7	45000	**F803_132.7 S4 M4LA4**	455	**F803_132.7 P132 BN132MA4**	456
11.4	5867	2.4	126.8	55000	**F903_126.8 S4 M4LA4**	458	**F903_126.8 P132 BN132MA4**	459
11.8	5669	1.4	122.5	45000	**F803_122.5 S4 M4LA4**	455	**F803_122.5 P132 BN132MA4**	456
12.7	5265	1.5	113.8	45000	**F803_113.8 S4 M4LA4**	455	**F803_113.8 P132 BN132MA4**	456
12.9	5181	2.7	111.9	55000	**F903_111.9 S4 M4LA4**	458	**F903_111.9 P132 BN132MA4**	459
13.1	5073	1.0	109.6	35000	**F703_109.6 S4 M4LA4**	452	**F703_109.6 P132 BN132MA4**	453
13.9	4783	2.9	103.3	55000	**F903_103.3 S4 M4LA4**	458	**F903_103.3 P132 BN132MA4**	459
14.2	4683	1.1	101.2	35000	**F703_101.2 S4 M4LA4**	452	**F703_101.2 P132 BN132MA4**	453
15.0	4432	3.2	95.8	55000	**F903_95.8 S4 M4LA4**	458	**F903_95.8 P132 BN132MA4**	459
15.6	4281	1.2	92.5	35000	**F703_92.5 S4 M4LA4**	452	**F703_92.5 P132 BN132MA4**	453
15.6	4272	1.9	92.3	45000	**F803_92.3 S4 M4LA4**	455	**F803_92.3 P132 BN132MA4**	456
16.3	4091	3.4	88.4	55000	**F903_88.4 S4 M4LA4**	458	**F903_88.4 P132 BN132MA4**	459
16.9	3952	1.3	85.4	35000	**F703_85.4 S4 M4LA4**	452	**F703_85.4 P132 BN132MA4**	453
16.9	3944	2.0	85.2	45000	**F803_85.2 S4 M4LA4**	455	**F803_85.2 P132 BN132MA4**	456
18.9	3529	2.3	76.3	45000	**F803_76.3 S4 M4LA4**	455	**F803_76.3 P132 BN132MA4**	456
19.6	3404	1.5	73.6	35000	**F703_73.6 S4 M4LA4**	452	**F703_73.6 P132 BN132MA4**	453
20.5	3258	2.5	70.4	44700	**F803_70.4 S4 M4LA4**	455	**F803_70.4 P132 BN132MA4**	456
21.1	3160	0.9	68.3	20000	**F603_68.3 S4 M4LA4**	448	**F603_68.3 P132 BN132MA4**	449
21.2	3143	1.6	67.9	35000	**F703_67.9 S4 M4LA4**	452	**F703_67.9 P132 BN132MA4**	453
22.8	2917	1.0	63.0	20000	**F603_63.0 S4 M4LA4**	448	**F603_63.0 P132 BN132MA4**	449
23.0	2893	1.7	62.5	35000	**F703_62.5 S4 M4LA4**	452	**F703_62.5 P132 BN132MA4**	453
23.4	2844	2.8	61.5	43500	**F803_61.5 S4 M4LA4**	455	**F803_61.5 P132 BN132MA4**	456
25.0	2670	1.9	57.7	34900	**F703_57.7 S4 M4LA4**	452	**F703_57.7 P132 BN132MA4**	453
25.4	2626	3.0	56.7	42600	**F803_56.7 S4 M4LA4**	455	**F803_56.7 P132 BN132MA4**	456
27.8	2399	1.2	51.8	20000	**F603_51.8 S4 M4LA4**	448	**F603_51.8 P132 BN132MA4**	449
29.4	2266	2.2	49.0	33800	**F703_49.0 S4 M4LA4**	452	**F703_49.0 P132 BN132MA4**	453
30.0	2214	1.3	47.8	20000	**F603_47.8 S4 M4LA4**	448	**F603_47.8 P132 BN132MA4**	449
32	2092	2.4	45.2	33200	**F703_45.2 S4 M4LA4**	452	**F703_45.2 P132 BN132MA4**	453
34	1948	1.5	42.1	20000	**F603_42.1 S4 M4LA4**	448	**F603_42.1 P132 BN132MA4**	449

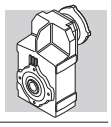

7.5 kW

n_2 min-1	M_2 Nm	S	i	R_{n2} N			IEC	
37	1798	1.6	38.8	20000	**F603_38.8 S4 M4LA4**	448	**F603_38.8 P132 BN132MA4**	449
39	1756	1.0	37.1	9090	**F512_37.1 S4 M4LA4**	444	**F512_37.1 P132 BN132MA4**	445
45	1485	2.0	32.1	20000	**F603_32.1 S4 M4LA4**	448	**F603_32.1 P132 BN132MA4**	449
48	1420	1.2	30.0	9010	**F512_30.0 S4 M4LA4**	444	**F512_30.0 P132 BN132MA4**	445
49	1371	2.1	29.6	20000	**F603_29.6 S4 M4LA4**	448	**F603_29.6 P132 BN132MA4**	449
57	1176	1.6	25.4	20000	**F603_25.4 S4 M4LA4**	448	**F603_25.4 P132 BN132MA4**	449
59	1137	3.5	24.6	28800	**F703_24.6 S4 M4LA4**	452	**F703_24.6 P132 BN132MA4**	453
60	1140	1.0	24.1	5500	**F412_24.1 S4 M4LA4**	440	**F412_24.1 P132 BN132MA4**	441
61	1125	1.5	23.8	8810	**F512_23.8 S4 M4LA4**	444	**F512_23.8 P132 BN132MA4**	445
61	1086	1.7	23.5	20000	**F603_23.5 S4 M4LA4**	448	**F603_23.5 P132 BN132MA4**	449
70	956	2.0	20.7	20000	**F603_20.7 S4 M4LA4**	448	**F603_20.7 P132 BN132MA4**	449
76	893	1.2	18.9	5630	**F412_18.9 S4 M4LA4**	440	**F412_18.9 P132 BN132MA4**	441
76	883	2.2	19.1	20000	**F603_19.1 S4 M4LA4**	448	**F603_19.1 P132 BN132MA4**	449
77	890	1.7	18.8	8520	**F512_18.8 S4 M4LA4**	444	**F512_18.8 P132 BN132MA4**	445
84	809	1.3	17.1	5650	**F412_17.1 S4 M4LA4**	440	**F412_17.1 P132 BN132MA4**	441
92	726	2.6	15.7	20000	**F603_15.7 S4 M4LA4**	448	**F603_15.7 P132 BN132MA4**	449
98	692	1.5	14.6	5630	**F412_14.6 S4 M4LA4**	440	**F412_14.6 P132 BN132MA4**	441
99	670	2.8	14.5	20000	**F603_14.5 S4 M4LA4**	448	**F603_14.5 P132 BN132MA4**	449
103	661	2.1	14.0	8080	**F512_14.0 S4 M4LA4**	444	**F512_14.0 P132 BN132MA4**	445
113	589	3.2	12.7	19900	**F603_12.7 S4 M4LA4**	448	**F603_12.7 P132 BN132MA4**	449
123	544	3.5	11.8	19500	**F603_11.8 S4 M4LA4**	448	**F603_11.8 P132 BN132MA4**	449
130	525	2.5	11.1	7700	**F512_11.1 S4 M4LA4**	444	**F512_11.1 P132 BN132MA4**	445
134	509	1.8	10.8	5490	**F412_10.8 S4 M4LA4**	440	**F412_10.8 P132 BN132MA4**	441
158	432	1.6	9.1	5410	**F412_9.1 S4 M4LA4**	440	**F412_9.1 P132 BN132MA4**	441
159	428	2.6	9.1	7290	**F512_9.1 S4 M4LA4**	444	**F512_9.1 P132 BN132MA4**	445
200	340	2.9	7.2	6900	**F512_7.2 S4 M4LA4**	444	**F512_7.2 P132 BN132MA4**	445
214	318	2.0	6.7	5140	**F412_6.7 S4 M4LA4**	440	**F412_6.7 P132 BN132MA4**	441
269	253	2.9	10.8	4880	**F412_10.8 S4 M4SB2**	440	**F412_10.8 P132 BN132SB2**	441
317	214	2.8	9.1	4730	**F412_9.1 S4 M4SB2**	440	**F412_9.1 P132 BN132SB2**	441
431	158	3.3	6.7	4390	**F412_6.7 S4 M4SB2**	440	**F412_6.7 P132 BN132SB2**	441

9.2 kW

n_2 min-1	M_2 Nm	S	i	R_{n2} N			IEC	
4.9	16172	0.9	291.1	55000	**F904_291.1 S4 M4LB4**	458	**F904_291.1 P132 BN132MB4**	459
5.4	14928	0.9	268.7	55000	**F904_268.7 S4 M4LB4**	458	**F904_268.7 P132 BN132MB4**	459
6.2	12854	1.1	231.4	55000	**F904_231.4 S4 M4LB4**	458	**F904_231.4 P132 BN132MB4**	459
6.7	11865	1.2	213.6	55000	**F904_213.6 S4 M4LB4**	458	**F904_213.6 P132 BN132MB4**	459
7.4	11023	1.3	194.2	55000	**F903_194.2 S4 M4LB4**	458	**F903_194.2 P132 BN132MB4**	459
8.0	10175	1.4	179.2	55000	**F903_179.2 S4 M4LB4**	458	**F903_179.2 P132 BN132MB4**	459
8.8	9244	1.5	162.8	55000	**F903_162.8 S4 M4LB4**	458	**F903_162.8 P132 BN132MB4**	459
9.6	8533	1.6	150.3	55000	**F903_150.3 S4 M4LB4**	458	**F903_150.3 P132 BN132MB4**	459
9.7	8397	1.0	147.9	45000	**F803_147.9 S4 M4LB4**	455	**F803_147.9 P132 BN132MB4**	456
10.5	7797	1.8	137.3	55000	**F903_137.3 S4 M4LB4**	458	**F903_137.3 P132 BN132MB4**	459
10.9	7533	1.1	132.7	45000	**F803_132.7 S4 M4LB4**	455	**F803_132.7 P132 BN132MB4**	456
11.4	7197	1.9	126.8	55000	**F903_126.8 S4 M4LB4**	458	**F903_126.8 P132 BN132MB4**	459
11.8	6954	1.2	122.5	45000	**F803_122.5 S4 M4LB4**	455	**F803_122.5 P132 BN132MB4**	456
12.7	6458	1.2	113.8	45000	**F803_113.8 S4 M4LB4**	455	**F803_113.8 P132 BN132MB4**	456

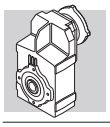

9.2 kW

n_2 min-1	M_2 Nm	S	i	R_{n2} N			IEC	
12.9	6355	2.2	111.9	55000	**F903_111.9 S4 M4LB4**	458	**F903_111.9 P132 BN132MB4**	459
13.9	5867	2.4	103.3	55000	**F903_103.3 S4 M4LB4**	458	**F903_103.3 P132 BN132MB4**	459
15.0	5437	2.6	95.8	55000	**F903_95.8 S4 M4LB4**	458	**F903_95.8 P132 BN132MB4**	459
15.6	5251	1.0	92.5	35000	**F703_92.5 S4 M4LB4**	452	**F703_92.5 P132 BN132MB4**	453
15.6	5241	1.5	92.3	45000	**F803_92.3 S4 M4LB4**	455	**F803_92.3 P132 BN132MB4**	456
16.3	5018	2.8	88.4	55000	**F903_88.4 S4 M4LB4**	458	**F903_88.4 P132 BN132MB4**	459
16.9	4848	1.0	85.4	35000	**F703_85.4 S4 M4LB4**	452	**F703_85.4 P132 BN132MB4**	453
16.9	4837	1.7	85.2	45000	**F803_85.2 S4 M4LB4**	455	**F803_85.2 P132 BN132MB4**	456
18.8	4352	3.2	76.7	55000	**F903_76.7 S4 M4LB4**	458	**F903_76.7 P132 BN132MB4**	459
18.9	4329	1.8	76.3	44100	**F803_76.3 S4 M4LB4**	455	**F803_76.3 P132 BN132MB4**	456
19.6	4176	1.2	73.6	35000	**F703_73.6 S4 M4LB4**	452	**F703_73.6 P132 BN132MB4**	453
20.4	4017	3.5	70.8	55000	**F903_70.8 S4 M4LB4**	458	**F903_70.8 P132 BN132MB4**	459
20.5	3996	2.0	70.4	43700	**F803_70.4 S4 M4LB4**	455	**F803_70.4 P132 BN132MB4**	456
21.2	3855	1.3	67.9	34600	**F703_67.9 S4 M4LB4**	452	**F703_67.9 P132 BN132MB4**	453
23.0	3548	1.4	62.5	34200	**F703_62.5 S4 M4LB4**	452	**F703_62.5 P132 BN132MB4**	453
23.4	3489	2.3	61.5	42200	**F803_61.5 S4 M4LB4**	455	**F803_61.5 P132 BN132MB4**	456
25.0	3275	1.5	57.7	33700	**F703_57.7 S4 M4LB4**	452	**F703_57.7 P132 BN132MB4**	453
25.4	3221	2.5	56.7	41400	**F803_56.7 S4 M4LB4**	455	**F803_56.7 P132 BN132MB4**	456
27.8	2942	1.0	51.8	20000	**F603_51.8 S4 M4LB4**	448	**F603_51.8 P132 BN132MB4**	449
29.4	2779	1.8	49.0	32800	**F703_49.0 S4 M4LB4**	452	**F703_49.0 P132 BN132MB4**	453
30.0	2716	1.1	47.8	20000	**F603_47.8 S4 M4LB4**	448	**F603_47.8 P132 BN132MB4**	449
32	2566	1.9	45.2	32300	**F703_45.2 S4 M4LB4**	452	**F703_45.2 P132 BN132MB4**	453
34	2389	1.2	42.1	20000	**F603_42.1 S4 M4LB4**	448	**F603_42.1 P132 BN132MB4**	449
37	2205	1.3	38.8	20000	**F603_38.8 S4 M4LB4**	448	**F603_38.8 P132 BN132MB4**	449
45	1821	1.6	32.1	20000	**F603_32.1 S4 M4LB4**	448	**F603_32.1 P132 BN132MB4**	449
48	1742	1.0	30.0	8210	**F512_30.0 S4 M4LB4**	444	**F512_30.0 P132 BN132MB4**	445
49	1681	1.7	29.6	20000	**F603_29.6 S4 M4LB4**	448	**F603_29.6 P132 BN132MB4**	449
57	1443	1.3	25.4	20000	**F603_25.4 S4 M4LB4**	448	**F603_25.4 P132 BN132MB4**	449
59	1394	2.9	24.6	28300	**F703_24.6 S4 M4LB4**	452	**F703_24.6 P132 BN132MB4**	453
61	1380	1.2	23.8	8170	**F512_23.8 S4 M4LB4**	444	**F512_23.8 P132 BN132MB4**	445
61	1332	1.4	23.5	20000	**F603_23.5 S4 M4LB4**	448	**F603_23.5 P132 BN132MB4**	449
64	1283	3.4	22.6	27800	**F703_22.6 S4 M4LB4**	452	**F703_22.6 P132 BN132MB4**	453
69	1185	3.4	20.9	27200	**F703_20.9 S4 M4LB4**	452	**F703_20.9 P132 BN132MB4**	453
70	1173	1.6	20.7	20000	**F603_20.7 S4 M4LB4**	448	**F603_20.7 P132 BN132MB4**	449
76	1096	1.0	18.9	4920	**F412_18.9 S4 M4LB4**	440	**F412_18.9 P132 BN132MB4**	441
76	1083	1.8	19.1	20000	**F603_19.1 S4 M4LB4**	448	**F603_19.1 P132 BN132MB4**	449
77	1092	1.4	18.8	8020	**F512_18.8 S4 M4LB4**	444	**F512_18.8 P132 BN132MB4**	445
84	993	1.1	17.1	5000	**F412_17.1 S4 M4LB4**	440	**F412_17.1 P132 BN132MB4**	441
92	890	2.1	15.7	20000	**F603_15.7 S4 M4LB4**	448	**F603_15.7 P132 BN132MB4**	449
98	848	1.2	14.6	5070	**F412_14.6 S4 M4LB4**	440	**F412_14.6 P132 BN132MB4**	441
99	822	2.3	14.5	20000	**F603_14.5 S4 M4LB4**	448	**F603_14.5 P132 BN132MB4**	449
103	811	1.8	14.0	7700	**F512_14.0 S4 M4LB4**	444	**F512_14.0 P132 BN132MB4**	445
113	723	2.6	12.7	19700	**F603_12.7 S4 M4LB4**	448	**F603_12.7 P132 BN132MB4**	449
123	667	2.8	11.8	19300	**F603_11.8 S4 M4LB4**	448	**F603_11.8 P132 BN132MB4**	449
130	644	2.1	11.1	7400	**F512_11.1 S4 M4LB4**	444	**F512_11.1 P132 BN132MB4**	445
134	625	1.4	10.8	5080	**F412_10.8 S4 M4LB4**	440	**F412_10.8 P132 BN132MB4**	441
148	551	3.4	9.7	18400	**F603_9.7 S4 M4LB4**	448	**F603_9.7 P132 BN132MB4**	449
158	530	1.3	9.1	5080	**F412_9.1 S4 M4LB4**	440	**F412_9.1 P132 BN132MB4**	441
159	525	2.1	9.1	7040	**F512_9.1 S4 M4LB4**	444	**F512_9.1 P132 BN132MB4**	445
200	417	2.3	7.2	6700	**F512_7.2 S4 M4LB4**	444	**F512_7.2 P132 BN132MB4**	445
214	390	1.6	6.7	4890	**F412_6.7 S4 M4LB4**	440	**F412_6.7 P132 BN132MB4**	441

9.2 kW

n_2 min-1	M_2 Nm	S	i	R_{n2} N			IEC	
264	317	3.4	11.1	6340	**F512_11.1 S4 M4LA2**	444	**F512_11.1 P132 BN132M2**	445
272	307	2.4	10.8	4680	**F412_10.8 S4 M4LA2**	440	**F412_10.8 P132 BN132M2**	441
321	260	2.3	9.1	4560	**F412_9.1 S4 M4LA2**	440	**F412_9.1 P132 BN132M2**	441
324	258	3.5	9.1	5980	**F512_9.1 S4 M4LA2**	444	**F512_9.1 P132 BN132M2**	445
436	192	2.7	6.7	4270	**F412_6.7 S4 M4LA2**	440	**F412_6.7 P132 BN132M2**	441

11 kW

n_2 min-1	M_2 Nm	S	i	R_{n2} N			IEC	
6.2	15369	0.9	231.4	55000	**F904_231.4 S4 M4LC4**	458	**F904_231.4 P160 BN160MR4**	459
6.7	14187	1.0	213.6	55000	**F904_213.6 S4 M4LC4**	458	**F904_213.6 P160 BN160MR4**	459
7.4	13179	1.1	194.2	55000	**F903_194.2 S4 M4LC4**	458	**F903_194.2 P160 BN160MR4**	459
8.0	12165	1.2	179.2	55000	**F903_179.2 S4 M4LC4**	458	**F903_179.2 P160 BN160MR4**	459
8.8	11053	1.3	162.8	55000	**F903_162.8 S4 M4LC4**	458	**F903_162.8 P160 BN160MR4**	459
9.6	10203	1.4	150.3	55000	**F903_150.3 S4 M4LC4**	458	**F903_150.3 P160 BN160MR4**	459
10.5	9323	1.5	137.3	55000	**F903_137.3 S4 M4LC4**	458	**F903_137.3 P160 BN160MR4**	459
11.4	8606	1.6	126.8	55000	**F903_126.8 S4 M4LC4**	458	**F903_126.8 P160 BN160MR4**	459
11.8	8314	1.0	122.5	45000	**F803_122.5 S4 M4LC4**	455	**F803_122.5 P160 BN160MR4**	456
12.7	7721	1.0	113.8	45000	**F803_113.8 S4 M4LC4**	455	**F803_113.8 P160 BN160MR4**	456
12.9	7599	1.8	111.9	55000	**F903_111.9 S4 M4LC4**	458	**F903_111.9 P160 BN160MR4**	459
13.9	7014	2.0	103.3	55000	**F903_103.3 S4 M4LC4**	458	**F903_103.3 P160 BN160MR4**	459
15.0	6500	2.2	95.8	55000	**F903_95.8 S4 M4LC4**	458	**F903_95.8 P160 BN160MR4**	459
15.6	6266	1.3	92.3	44100	**F803_92.3 S4 M4LC4**	455	**F803_92.3 P160 BN160MR4**	456
16.3	6000	2.3	88.4	55000	**F903_88.4 S4 M4LC4**	458	**F903_88.4 P160 BN160MR4**	459
16.9	5784	1.4	85.2	44000	**F803_85.2 S4 M4LC4**	455	**F803_85.2 P160 BN160MR4**	456
18.8	5203	2.7	76.7	55000	**F903_76.7 S4 M4LC4**	458	**F903_76.7 P160 BN160MR4**	459
18.9	5176	1.5	76.3	42800	**F803_76.3 S4 M4LC4**	455	**F803_76.3 P160 BN160MR4**	456
19.6	4993	1.0	73.6	33500	**F703_73.6 S4 M4LC4**	452	**F703_73.6 P160 BN160MR4**	453
20.4	4803	2.9	70.8	55000	**F903_70.8 S4 M4LC4**	458	**F903_70.8 P160 BN160MR4**	459
20.5	4778	1.7	70.4	42500	**F803_70.4 S4 M4LC4**	455	**F803_70.4 P160 BN160MR4**	456
21.2	4609	1.1	67.9	33100	**F703_67.9 S4 M4LC4**	452	**F703_67.9 P160 BN160MR4**	453
23.0	4243	1.2	62.5	32900	**F703_62.5 S4 M4LC4**	452	**F703_62.5 P160 BN160MR4**	453
23.2	4215	3.3	62.1	55000			**F903_62.1 P160 BN160MR4**	459
23.4	4172	1.9	61.5	41100	**F803_61.5 S4 M4LC4**	455	**F803_61.5 P160 BN160MR4**	456
25.0	3916	1.3	57.7	32500	**F703_57.7 S4 M4LC4**	452	**F703_57.7 P160 BN160MR4**	453
25.4	3851	2.1	56.7	40800	**F803_56.7 S4 M4LC4**	455	**F803_56.7 P160 BN160MR4**	456
29.3	3333	2.4	49.1	39300			**F803_49.1 P160 BN160MR4**	456
29.4	3323	1.5	49.0	31800	**F703_49.0 S4 M4LC4**	452	**F703_49.0 P160 BN160MR4**	453
32	3068	1.6	45.2	31300	**F703_45.2 S4 M4LC4**	452	**F703_45.2 P160 BN160MR4**	453
32	3077	2.6	45.3	38900			**F803_45.3 P160 BN160MR4**	456
34	2857	1.0	42.1	20000	**F603_42.1 S4 M4LC4**	448	**F603_42.1 P160 BN160MR4**	449
37	2637	1.1	38.8	20000	**F603_38.8 S4 M4LC4**	448	**F603_38.8 P160 BN160MR4**	449
38	2606	1.9	38.4	30500			**F703_38.4 P160 BN160MR4**	453
41	2406	2.1	35.4	30000			**F703_35.4 P160 BN160MR4**	453
45	2178	1.3	32.1	20000	**F603_32.1 S4 M4LC4**	448	**F603_32.1 P160 BN160MR4**	449
49	2010	1.4	29.6	20000	**F603_29.6 S4 M4LC4**	448	**F603_29.6 P160 BN160MR4**	449
52	1880	2.5	27.7	28500			**F703_27.7 P160 BN160MR4**	453
57	1725	1.1	25.4	20000	**F603_25.4 S4 M4LC4**	448	**F603_25.4 P160 BN160MR4**	449

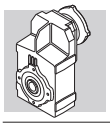

11 kW

n_2 min-1	M_2 Nm	S	i	R_{n2} N			IEC	
59	1667	2.4	24.6	27800	**F703_24.6 S4 M4LC4**	452	**F703_24.6 P160 BN160MR4**	453
61	1650	1.0	23.8	7500	**F512_23.8 S4 M4LC4**	444	**F512_23.8 P160 BN160MR4**	445
61	1593	1.2	23.5	20000	**F603_23.5 S4 M4LC4**	448	**F603_23.5 P160 BN160MR4**	449
64	1534	2.8	22.6	27300	**F703_22.6 S4 M4LC4**	452	**F703_22.6 P160 BN160MR4**	453
69	1416	2.8	20.9	26800	**F703_20.9 S4 M4LC4**	452	**F703_20.9 P160 BN160MR4**	453
70	1402	1.4	20.7	20000	**F603_20.7 S4 M4LC4**	448	**F603_20.7 P160 BN160MR4**	449
76	1294	1.5	19.1	20000	**F603_19.1 S4 M4LC4**	448	**F603_19.1 P160 BN160MR4**	449
77	1305	1.2	18.8	7490	**F512_18.8 S4 M4LC4**	444	**F512_18.8 P160 BN160MR4**	445
92	1064	1.8	15.7	20000	**F603_15.7 S4 M4LC4**	448	**F603_15.7 P160 BN160MR4**	449
98	1014	1.0	14.6	4490	**F412_14.6 S4 M4LC4**	440		
99	982	1.9	14.5	20000	**F603_14.5 S4 M4LC4**	448	**F603_14.5 P160 BN160MR4**	449
103	969	1.5	14.0	7310	**F512_14.0 S4 M4LC4**	444	**F512_14.0 P160 BN160MR4**	445
113	864	2.2	12.7	19400	**F603_12.7 S4 M4LC4**	448	**F603_12.7 P160 BN160MR4**	449
123	798	2.4	11.8	19000	**F603_11.8 S4 M4LC4**	448	**F603_11.8 P160 BN160MR4**	449
130	770	1.7	11.1	7090	**F512_11.1 S4 M4LC4**	444	**F512_11.1 P160 BN160MR4**	445
134	747	1.2	10.8	4650	**F412_10.8 S4 M4LC4**	440		
148	659	2.9	9.7	18200	**F603_9.7 S4 M4LC4**	448	**F603_9.7 P160 BN160MR4**	449
158	633	1.1	9.1	4720	**F412_9.1 S4 M4LC4**	440		
159	628	1.8	9.1	6770	**F512_9.1 S4 M4LC4**	444	**F512_9.1 P160 BN160MR4**	445
161	608	3.1	9.0	17800	**F603_9.0 S4 M4LC4**	448	**F603_9.0 P160 BN160MR4**	449
200	499	2.0	7.2	6490	**F512_7.2 S4 M4LC4**	444	**F512_7.2 P160 BN160MR4**	445
214	466	1.4	6.7	4630	**F412_6.7 S4 M4LC4**	440		
263	380	2.8	11.1	6170	**F512_11.1 S4 M4LC2**	444	**F512_11.1 P160 BN160MR2**	445
271	368	2.0	10.8	4460	**F412_10.8 S4 M4LC2**	440		
320	312	2.0	9.1	4380	**F412_9.1 S4 M4LC2**	440		
323	310	2.9	9.1	5840	**F512_9.1 S4 M4LC2**	444	**F512_9.1 P160 BN160MR2**	445
406	246	3.2	7.2	5510	**F512_7.2 S4 M4LC2**	444	**F512_7.2 P160 BN160MR2**	445
434	230	2.3	6.7	4130	**F412_6.7 S4 M4LC2**	440		

15 kW

n_2 min-1	M_2 Nm	S	i	R_{n2} N			IEC	
8.1	16362	0.9	179.2	55000	**F903_179.2 S5 M5SB4**	458	**F903_179.2 P160 BN160L4**	459
9.0	14866	0.9	162.8	55000	**F903_162.8 S5 M5SB4**	458	**F903_162.8 P160 BN160L4**	459
9.7	13722	1.0	150.3	55000	**F903_150.3 S5 M5SB4**	458	**F903_150.3 P160 BN160L4**	459
10.6	12539	1.1	137.3	55000	**F903_137.3 S5 M5SB4**	458	**F903_137.3 P160 BN160L4**	459
11.5	11574	1.2	126.8	55000	**F903_126.8 S5 M5SB4**	458	**F903_126.8 P160 BN160L4**	459
13.0	10220	1.4	111.9	55000	**F903_111.9 S5 M5SB4**	458	**F903_111.9 P160 BN160L4**	459
14.1	9434	1.5	103.3	55000	**F903_103.3 S5 M5SB4**	458	**F903_103.3 P160 BN160L4**	459
15.2	8743	1.6	95.8	55000	**F903_95.8 S5 M5SB4**	458	**F903_95.8 P160 BN160L4**	459
15.8	8427	0.9	92.3	41300	**F803_92.3 S5 M5SB4**	455	**F803_92.3 P160 BN160L4**	456
16.5	8070	1.7	88.4	55000	**F903_88.4 S5 M5SB4**	458	**F903_88.4 P160 BN160L4**	459
17.1	7779	1.0	85.2	40800	**F803_85.2 S5 M5SB4**	455	**F803_85.2 P160 BN160L4**	456
19.0	6998	2.0	76.7	55000	**F903_76.7 S5 M5SB4**	458	**F903_76.7 P160 BN160L4**	459
19.1	6961	1.1	76.3	40500	**F803_76.3 S5 M5SB4**	455	**F803_76.3 P160 BN160L4**	456
20.6	6460	2.2	70.8	55000	**F903_70.8 S5 M5SB4**	458	**F903_70.8 P160 BN160L4**	459
20.7	6426	1.2	70.4	39900	**F803_70.4 S5 M5SB4**	455	**F803_70.4 P160 BN160L4**	456
23.5	5669	2.5	62.1	55000			**F903_62.1 P160 BN160L4**	459

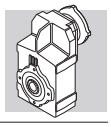

15 kW

n_2 min-1	M_2 Nm	S	i	R_{n2} N			IEC	
23.8	5611	1.4	61.5	38700	**F803_61.5 S5 M5SB4**	455	**F803_61.5 P160 BN160L4**	456
25.3	5267	0.9	57.7	29700	**F703_57.7 S5 M5SB4**	452	**F703_57.7 P160 BN160L4**	453
25.5	5233	2.7	57.3	55000			**F903_57.3 P160 BN160L4**	459
25.7	5179	1.5	56.7	38600	**F803_56.7 S5 M5SB4**	455	**F803_56.7 P160 BN160L4**	456
29.7	4483	1.8	49.1	37800			**F803_49.1 P160 BN160L4**	456
29.8	4470	1.1	49.0	29400	**F703_49.0 S5 M5SB4**	452	**F703_49.0 P160 BN160L4**	453
32	4126	1.2	45.2	29100	**F703_45.2 S5 M5SB4**	452	**F703_45.2 P160 BN160L4**	453
32	4138	1.9	45.3	37200			**F803_45.3 P160 BN160L4**	456
38	3505	1.4	38.4	28600			**F703_38.4 P160 BN160L4**	453
41	3235	1.5	35.4	28200			**F703_35.4 P160 BN160L4**	453
46	2929	1.0	32.1	20000	**F603_32.1 S5 M5SB4**	448	**F603_32.1 P160 BN160L4**	449
49	2704	1.1	29.6	20000	**F603_29.6 S5 M5SB4**	448	**F603_29.6 P160 BN160L4**	449
53	2528	1.8	27.7	27100			**F703_27.7 P160 BN160L4**	453
58	2303	2.7	25.2	32900	**F803_25.2 S5 M5SB4**	455	**F803_25.2 P160 BN160L4**	456
59	2242	1.8	24.6	26500	**F703_24.6 S5 M5SB4**	452	**F703_24.6 P160 BN160L4**	453
65	2064	2.1	22.6	26200	**F703_22.6 S5 M5SB4**	452	**F703_22.6 P160 BN160L4**	453
66	2011	3.4	22.0	31900	**F803_22.0 S5 M5SB4**	455	**F803_22.0 P160 BN160L4**	456
70	1905	2.1	20.9	25700	**F703_20.9 S5 M5SB4**	452	**F703_20.9 P160 BN160L4**	453
71	1886	1.0	20.7	20000	**F603_20.7 S5 M5SB4**	448	**F603_20.7 P160 BN160L4**	449
72	1856	3.4	20.3	31300	**F803_20.3 S5 M5SB4**	455	**F803_20.3 P160 BN160L4**	456
77	1741	1.1	19.1	20000	**F603_19.1 S5 M5SB4**	448	**F603_19.1 P160 BN160L4**	449
82	1617	2.7	17.7	24900	**F703_17.7 S5 M5SB4**	452	**F703_17.7 P160 BN160L4**	453
89	1492	2.7	16.3	24400	**F703_16.3 S5 M5SB4**	452	**F703_16.3 P160 BN160L4**	453
93	1432	1.3	15.7	19600	**F603_15.7 S5 M5SB4**	448	**F603_15.7 P160 BN160L4**	449
101	1321	1.4	14.5	19200	**F603_14.5 S5 M5SB4**	448	**F603_14.5 P160 BN160L4**	449
105	1268	3.1	13.9	23600	**F703_13.9 S5 M5SB4**	452	**F703_13.9 P160 BN160L4**	453
114	1170	3.1	12.8	23100	**F703_12.8 S5 M5SB4**	452	**F703_12.8 P160 BN160L4**	453
115	1162	1.6	12.7	18800	**F603_12.7 S5 M5SB4**	448	**F603_12.7 P160 BN160L4**	449
124	1073	1.8	11.8	18400	**F603_11.8 S5 M5SB4**	448	**F603_11.8 P160 BN160L4**	449
135	991	3.5	10.9	22300	**F703_10.9 S5 M5SB4**	452	**F703_10.9 P160 BN160L4**	453
146	914	3.5	10.0	21800	**F703_10.0 S5 M5SB4**	452	**F703_10.0 P160 BN160L4**	453
150	886	2.1	9.7	17700	**F603_9.7 S5 M5SB4**	448	**F603_9.7 P160 BN160L4**	449
163	818	2.3	9.0	17300	**F603_9.0 S5 M5SB4**	448	**F603_9.0 P160 BN160L4**	449

18.5 kW

n_2 min-1	M_2 Nm	S	i	R_{n2} N			IEC	
10.6	15456	0.9	137.3	55000	**F903_137.3 S5 M5LA4**	458	**F903_137.3 P180 BN180M4**	459
11.5	14267	1.0	126.8	55000	**F903_126.8 S5 M5LA4**	458	**F903_126.8 P180 BN180M4**	459
13.0	12598	1.1	111.9	55000	**F903_111.9 S5 M5LA4**	458	**F903_111.9 P180 BN180M4**	459
14.1	11629	1.2	103.3	55000	**F903_103.3 S5 M5LA4**	458	**F903_103.3 P180 BN180M4**	459
15.2	10777	1.3	95.8	55000	**F903_95.8 S5 M5LA4**	458	**F903_95.8 P180 BN180M4**	459
16.5	9948	1.4	88.4	55000	**F903_88.4 S5 M5LA4**	458	**F903_88.4 P180 BN180M4**	459
19.0	8626	1.6	76.7	55000	**F903_76.7 S5 M5LA4**	458	**F903_76.7 P180 BN180M4**	459
19.1	8581	0.9	76.3	38100	**F803_76.3 S5 M5LA4**	455	**F803_76.3 P180 BN180M4**	456
20.6	7963	1.8	70.8	55000	**F903_70.8 S5 M5LA4**	458	**F903_70.8 P180 BN180M4**	459
20.7	7921	1.0	70.4	37600	**F803_70.4 S5 M5LA4**	455	**F803_70.4 P180 BN180M4**	456
23.5	6989	2.0	62.1	55000			**F903_62.1 P180 BN180M4**	459

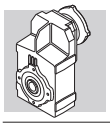

18.5 kW

n_2 min-1	M_2 Nm	S	i	R_{n2} N			IEC	
23.8	6916	1.1	61.5	37400	**F803_61.5 S5 M5LA4**	455	**F803_61.5 P180 BN180M4**	456
25.5	6451	2.2	57.3	55000			**F903_57.3 P180 BN180M4**	459
25.7	6384	1.3	56.7	36800	**F803_56.7 S5 M5LA4**	455	**F803_56.7 P180 BN180M4**	456
29.3	5615	2.5	49.9	55000			**F903_49.9 P180 BN180M4**	459
29.7	5526	1.4	49.1	35800			**F803_49.1 P180 BN180M4**	456
29.8	5510	0.9	49.0	27400	**F703_49.0 S5 M5LA4**	452	**F703_49.0 P180 BN180M4**	453
32	5183	2.7	46.1	55000			**F903_46.1 P180 BN180M4**	459
32	5101	1.6	45.3	35700			**F803_45.3 P180 BN180M4**	456
32	5086	1.0	45.2	27200	**F703_45.2 S5 M5LA4**	452	**F703_45.2 P180 BN180M4**	453
36	4558	3.1	40.5	53700			**F903_40.5 P180 BN180M4**	459
37	4389	1.8	39.0	35000			**F803_39.0 P180 BN180M4**	456
38	4321	1.2	38.4	27000			**F703_38.4 P180 BN180M4**	453
39	4207	3.2	37.4	52700			**F903_37.4 P180 BN180M4**	459
41	4051	2.0	36.0	34400			**F803_36.0 P180 BN180M4**	456
41	3988	1.3	35.4	26700			**F703_35.4 P180 BN180M4**	453
47	3517	2.3	31.3	33600			**F803_31.3 P180 BN180M4**	456
49	3376	1.5	30.0	26300			**F703_30.0 P180 BN180M4**	453
51	3246	2.5	28.8	33000			**F803_28.8 P180 BN180M4**	456
53	3116	1.5	27.7	26000			**F703_27.7 P180 BN180M4**	453
58	2839	2.2	25.2	32100	**F803_25.2 S5 M5LA4**	455	**F803_25.2 P180 BN180M4**	456
59	2764	1.4	24.6	25500	**F703_24.6 S5 M5LA4**	452	**F703_24.6 P180 BN180M4**	453
65	2544	1.7	22.6	25200	**F703_22.6 S5 M5LA4**	452	**F703_22.6 P180 BN180M4**	453
66	2479	2.7	22.0	31300	**F803_22.0 S5 M5LA4**	455	**F803_22.0 P180 BN180M4**	456
70	2348	1.7	20.9	24900	**F703_20.9 S5 M5LA4**	452	**F703_20.9 P180 BN180M4**	453
72	2288	2.7	20.3	30600	**F803_20.3 S5 M5LA4**	455	**F803_20.3 P180 BN180M4**	456
82	1993	2.2	17.7	24200	**F703_17.7 S5 M5LA4**	452	**F703_17.7 P180 BN180M4**	453
83	1981	3.4	17.6	29700	**F803_17.6 S5 M5LA4**	455	**F803_17.6 P180 BN180M4**	456
89	1839	2.2	16.3	23800	**F703_16.3 S5 M5LA4**	452	**F703_16.3 P180 BN180M4**	453
90	1828	3.4	16.2	29100	**F803_16.2 S5 M5LA4**	455	**F803_16.2 P180 BN180M4**	456
93	1765	1.1	15.7	18700	**F603_15.7 S5 M5LA4**	448	**F603_15.7 P180 BN180M4**	449
101	1629	1.2	14.5	18600	**F603_14.5 S5 M5LA4**	448	**F603_14.5 P180 BN180M4**	449
105	1563	2.5	13.9	23000	**F703_13.9 S5 M5LA4**	452	**F703_13.9 P180 BN180M4**	453
114	1442	2.5	12.8	22600	**F703_12.8 S5 M5LA4**	452	**F703_12.8 P180 BN180M4**	453
115	1433	1.3	12.7	18300	**F603_12.7 S5 M5LA4**	448	**F603_12.7 P180 BN180M4**	449
124	1323	1.4	11.8	17900	**F603_11.8 S5 M5LA4**	448	**F603_11.8 P180 BN180M4**	449
135	1221	2.8	10.9	21800	**F703_10.9 S5 M5LA4**	452	**F703_10.9 P180 BN180M4**	453
146	1127	2.8	10.0	21400	**F703_10.0 S5 M5LA4**	452	**F703_10.0 P180 BN180M4**	453
150	1092	1.7	9.7	17300	**F603_9.7 S5 M5LA4**	448	**F603_9.7 P180 BN180M4**	449
163	1008	1.9	9.0	16900	**F603_9.0 S5 M5LA4**	448	**F603_9.0 P180 BN180M4**	449

22 kW

n_2 min-1	M_2 Nm	S	i	R_{n2} N			IEC	
13.1	14880	0.9	111.9	55000			**F903_111.9 P180 BN180L4**	459
14.2	13735	1.0	103.3	55000			**F903_103.3 P180 BN180L4**	459
15.4	12728	1.1	95.8	55000			**F903_95.8 P180 BN180L4**	459
16.6	11749	1.2	88.4	55000			**F903_88.4 P180 BN180L4**	459
19.2	10188	1.4	76.7	55000			**F903_76.7 P180 BN180L4**	459

22 kW

n_2 min-1	M_2 Nm	S	i	R_{n2} N			IEC	
20.8	9405	1.5	70.8	55000			**F903_70.8 P180 BN180L4**	459
23.7	8254	1.7	62.1	55000			**F903_62.1 P180 BN180L4**	459
23.9	8169	1.0	61.5	35400			**F803_61.5 P180 BN180L4**	456
25.6	7619	1.8	57.3	55000			**F903_57.3 P180 BN180L4**	459
25.9	7541	1.1	56.7	35000			**F803_56.7 P180 BN180L4**	456
29.5	6632	2.1	49.9	54400			**F903_49.9 P180 BN180L4**	459
29.9	6527	1.2	49.1	34100			**F803_49.1 P180 BN180L4**	456
32	6122	2.3	46.1	53500			**F903_46.1 P180 BN180L4**	459
32	6025	1.3	45.3	34300			**F803_45.3 P180 BN180L4**	456
36	5383	2.6	40.5	52300			**F903_40.5 P180 BN180L4**	459
38	5184	1.5	39.0	33300			**F803_39.0 P180 BN180L4**	456
38	5103	1	38.4	25400			**F703_38.4 P180 BN180L4**	453
39	4969	2.7	37.4	51400			**F903_37.4 P180 BN180L4**	459
41	4785	1.7	36.0	33200			**F803_36.0 P180 BN180L4**	456
41	4711	1.1	35.4	25300			**F703_35.4 P180 BN180L4**	453
47	4154	1.9	31.3	32600			**F803_31.3 P180 BN180L4**	456
47	4120	3.2	31.0	49500			**F903_31.0 P180 BN180L4**	459
49	3988	1.3	30.0	25100			**F703_30.0 P180 BN180L4**	453
51	3834	2.1	28.8	32000			**F803_28.8 P180 BN180L4**	456
51	3803	3.2	28.6	48600			**F903_28.6 P180 BN180L4**	459
53	3681	1.3	27.7	24800			**F703_27.7 P180 BN180L4**	453
58	3353	1.9	25.2	31300			**F803_25.2 P180 BN180L4**	456
60	3264	1.2	24.6	24500			**F703_24.6 P180 BN180L4**	453
65	3005	1.4	22.6	24300			**F703_22.6 P180 BN180L4**	453
67	2928	2.3	22	30200			**F803_22.0 P180 BN180L4**	456
70	2773	1.4	20.9	24000			**F703_20.9 P180 BN180L4**	453
72	2703	2.3	20.3	29900			**F803_20.3 P180 BN180L4**	456
83	2354	1.8	17.7	23400			**F703_17.7 P180 BN180L4**	453
84	2339	2.9	17.6	29100			**F803_17.6 P180 BN180L4**	456
90	2173	1.8	16.3	23100			**F703_16.3 P180 BN180L4**	453
90	2159	2.9	16.2	28500			**F803_16.2 P180 BN180L4**	456
106	1846	2.1	13.9	22400			**F703_13.9 P180 BN180L4**	453
115	1704	2.1	12.8	22100			**F703_12.8 P180 BN180L4**	453
115	1692	1.1	12.7	17700			**F603_12.7 P180 BN180L4**	449
125	1562	1.2	11.8	17400			**F603_11.8 P180 BN180L4**	449
135	1442	2.4	10.9	21400			**F703_10.9 P180 BN180L4**	453
147	1331	2.4	10.0	21000			**F703_10.0 P180 BN180L4**	453
151	1290	1.5	9.7	16900			**F603_9.7 P180 BN180L4**	449
164	1191	1.6	9.0	16500			**F603_9.0 P180 BN180L4**	449

30 kW

n_2 min-1	M_2 Nm	S	i	R_{n2} N			IEC	
16.6	16022	0.9	88.4	52200			**F903_88.4 P200 BN200L4**	459
19.2	13893	1.0	76.7	52400			**F903_76.7 P200 BN200L4**	459
20.8	12825	1.1	70.8	52100			**F903_70.8 P200 BN200L4**	459
23.7	11256	1.2	62.1	51800			**F903_62.1 P200 BN200L4**	459

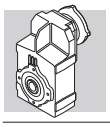

30 kW

n_2 min-1	M_2 Nm	S	i	R_{n2} N			IEC	
25.6	10390	1.3	57.3	51400			**F903_57.3 P200 BN200L4**	459
29.5	9044	1.5	49.9	50800			**F903_49.9 P200 BN200L4**	459
32	8348	1.7	46.1	50200			**F903_46.1 P200 BN200L4**	459
32	8216	1.0	45.3	30900			**F803_45.3 P200 BN200L4**	456
36	7341	1.9	40.5	49400			**F903_40.5 P200 BN200L4**	459
38	7069	1.1	39.0	31000			**F803_39.0 P200 BN200L4**	456
39	6776	2.0	37.4	48700			**F903_37.4 P200 BN200L4**	459
41	6525	1.2	36.0	30600			**F803_36.0 P200 BN200L4**	456
47	5664	1.4	31.3	29900			**F803_31.3 P200 BN200L4**	456
47	5618	2.3	31.0	47300			**F903_31.0 P200 BN200L4**	459
49	5438	0.9	30.0	22300			**F703_30.0 P200 BN200L4**	453
51	5229	1.5	28.8	29500			**F803_28.8 P200 BN200L4**	456
51	5186	2.3	28.6	46600			**F903_28.6 P200 BN200L4**	459
53	5019	0.9	27.7	22200			**F703_27.7 P200 BN200L4**	453
58	4601	2.6	25.4	45500			**F903_25.4 P200 BN200L4**	459
58	4572	1.2	25.2	29500			**F803_25.2 P200 BN200L4**	456
66	4039	3.0	22.3	44400			**F903_22.3 P200 BN200L4**	459
67	3992	1.7	22.0	29000			**F803_22.0 P200 BN200L4**	456
71	3728	3.0	20.6	43600			**F903_20.6 P200 BN200L4**	459
72	3685	1.7	20.3	28500			**F803_20.3 P200 BN200L4**	456
83	3209	1.4	17.7	21800			**F703_17.7 P200 BN200L4**	453
84	3190	2.1	17.6	27900			**F803_17.6 P200 BN200L4**	456
90	2963	1.4	16.3	21500			**F703_16.3 P200 BN200L4**	453
90	2945	2.1	16.2	27400			**F803_16.2 P200 BN200L4**	456
105	2534	2.7	14.0	26700			**F803_14.0 P200 BN200L4**	456
106	2517	1.5	13.9	21100			**F703_13.9 P200 BN200L4**	453
114	2339	2.7	12.9	26200			**F803_12.9 P200 BN200L4**	456
115	2323	1.5	12.8	20900			**F703_12.8 P200 BN200L4**	453
135	1967	1.8	10.9	20300			**F703_10.9 P200 BN200L4**	453
142	1874	3.0	10.3	24900			**F803_10.3 P200 BN200L4**	456
147	1815	1.8	10.0	20000			**F703_10.0 P200 BN200L4**	453

37 kW

n_2 min-1	M_2 Nm	S	i	R_{n2} N			IEC	
20.9	15710	0.9	70.8	47600			**F903_70.8 P225 BN225S4**	459
25.8	12728	1.1	57.3	47700			**F903_57.3 P225 BN225S4**	459
29.7	11079	1.3	49.9	47600			**F903_49.9 P225 BN225S4**	459
32	10227	1.4	46.1	47200			**F903_46.1 P225 BN225S4**	459
37	8993	1.6	40.5	46800			**F903_40.5 P225 BN225S4**	459
38	8659	0.9	39.0	28500			**F803_39.0 P225 BN225S4**	456
40	8301	1.6	37.4	46300			**F903_37.4 P225 BN225S4**	459
41	7993	1.0	36.0	28300			**F803_36.0 P225 BN225S4**	456
47	6939	1.2	31.3	28400			**F803_31.3 P225 BN225S4**	456
48	6882	1.9	31.0	45300			**F903_31.0 P225 BN225S4**	459
51	6405	1.2	28.8	28100			**F803_28.8 P225 BN225S4**	456
52	6353	1.9	28.6	44700			**F903_28.6 P225 BN225S4**	459
58	5637	2.1	25.4	43900			**F903_25.4 P225 BN225S4**	459

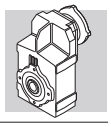

37 kW

n_2 min-1	M_2 Nm	S	i	R_{n2} N			IEC	
59	5601	1.1	25.2	27800			**F803_25.2 P225 BN225S4**	456
66	4947	2.4	22.3	43000			**F903_22.3 P225 BN225S4**	459
67	4891	1.1	22.0	27600			**F803_22.0 P225 BN225S4**	456
72	4567	2.5	20.6	42300			**F903_20.6 P225 BN225S4**	459
73	4515	1.1	20.3	27200			**F803_20.3 P225 BN225S4**	456
83	3975	2.8	17.9	41200			**F903_17.9 P225 BN225S4**	459
84	3908	1.7	17.6	26800			**F803_17.6 P225 BN225S4**	456
90	3669	2.8	16.5	40500			**F903_16.5 P225 BN225S4**	459
91	3607	1.7	16.2	26300			**F803_16.2 P225 BN225S4**	456
102	3226	3.1	14.5	39500			**F903_14.5 P225 BN225S4**	459
106	3104	2.2	14.0	25800			**F803_14.0 P225 BN225S4**	456
110	2978	3.1	13.4	38700			**F903_13.4 P225 BN225S4**	459
115	2865	2.2	12.9	25300			**F803_12.9 P225 BN225S4**	456
132	2487	2.4	11.2	24500			**F803_11.2 P225 BN225S4**	456
143	2296	2.4	10.3	24300			**F803_10.3 P225 BN225S4**	456

45 kW

n_2 min-1	M_2 Nm	S	i	R_{n2} N			IEC	
32	12438	1.1	46.1	43900			**F903_46.1 P225 BN225M4**	459
37	10937	1.3	40.5	43900			**F903_40.5 P225 BN225M4**	459
40	10096	1.3	37.4	43600			**F903_37.4 P225 BN225M4**	459
47	8439	0.9	31.3	26100			**F803_31.3 P225 BN225M4**	456
48	8370	1.6	31.0	43100			**F903_31.0 P225 BN225M4**	459
51	7790	1.0	28.8	26000			**F803_28.8 P225 BN225M4**	456
52	7726	1.6	28.6	42600			**F903_28.6 P225 BN225M4**	459
58	6855	1.8	25.4	42000			**F903_25.4 P225 BN225M4**	459
66	6017	2.0	22.3	41400			**F903_22.3 P225 BN225M4**	459
67	5948	1.1	22.0	26000			**F803_22.0 P225 BN225M4**	456
72	5554	2.0	20.6	40800			**F903_20.6 P225 BN225M4**	459
73	5491	1.1	20.3	25700			**F803_20.3 P225 BN225M4**	456
83	4834	2.3	17.9	39900			**F903_17.9 P225 BN225M4**	459
84	4753	1.4	17.6	25500			**F803_17.6 P225 BN225M4**	456
90	4463	2.3	16.5	39300			**F903_16.5 P225 BN225M4**	459
91	4387	1.4	16.2	25200			**F803_16.2 P225 BN225M4**	456
102	3924	2.5	14.5	38400			**F903_14.5 P225 BN225M4**	459
106	3775	1.8	14.0	24800			**F803_14.0 P225 BN225M4**	456
110	3622	2.6	13.4	37800			**F903_13.4 P225 BN225M4**	459
115	3484	1.8	12.9	24100			**F803_12.9 P225 BN225M4**	456
132	3025	1.5	11.2	24000			**F803_11.2 P225 BN225M4**	456
133	3003	2.9	11.1	36400			**F903_11.1 P225 BN225M4**	459
143	2792	2.0	10.3	23500			**F803_10.3 P225 BN225M4**	456

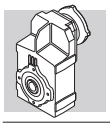

55 kW

n_2 min^{-1}	M_2 Nm	S	i	R_{n2} N			IEC	
32	15202	0.9	46.1	39700			**F903_46.1 P250 BN250M4**	459
37	13367	1.0	40.5	40300			**F903_40.5 P250 BN250M4**	459
40	12339	1.1	37.4	40200			**F903_37.4 P250 BN250M4**	459
48	10230	1.3	31.0	40300			**F903_31.0 P250 BN250M4**	459
52	9443	1.3	28.6	40100			**F903_28.6 P250 BN250M4**	459
58	8379	1.4	25.4	39700			**F903_25.4 P250 BN250M4**	459
66	7354	1.6	22.3	39400			**F903_22.3 P250 BN250M4**	459
72	6788	1.7	20.6	38900			**F903_20.6 P250 BN250M4**	459
83	5909	1.9	17.9	38300			**F903_17.9 P250 BN250M4**	459
90	5454	1.9	16.5	37800			**F903_16.5 P250 BN250M4**	459
102	4796	2.1	14.5	37100			**F903_14.5 P250 BN250M4**	459
110	4427	2.1	13.4	36600			**F903_13.4 P250 BN250M4**	459
133	3671	2.4	11.1	35400			**F903_11.1 P250 BN250M4**	459
144	3388	2.4	10.3	34800			**F903_10.3 P250 BN250M4**	459

F 10 — 140 Nm

	i	n_1 = 2800 min-1					n_1 = 1400 min-1					
		n_2 min-1	M_{n2} Nm	P_{n1} kW	R_{n1} N	R_{n2} N	n_2 min-1	M_{n2} Nm	P_{n1} kW	R_{n1} N	R_{n2} N	
F 10 2_7.4	7.4	378	63	2.6	1000	1290	189	76	1.6	1290	1640	
F 10 2_8.6	8.6	326	67	2.4	980	1350	163	82	1.5	1260	1710	
F 10 2_9.8	9.8	287	73	2.3	980	1410	143	89	1.4	1250	1780	
F 10 2_11.5	11.5	243	78	2.1	950	1480	121	96	1.3	1220	1870	
F 10 2_13.0	13.0	215	85	2.0	940	1530	107	104	1.2	1210	1940	
F 10 2_14.6	14.6	191	94	2.0	1120	1590	96	119	1.3	1300	2000	
F 10 2_17.0	17.0	165	104	1.9	1090	1650	82	128	1.2	1300	2090	
F 10 2_19.3	19.3	145	108	1.7	1100	1730	72	136	1.1	1300	2180	
F 10 2_22.8	22.8	123	119	1.6	1080	1810	61	140	0.95	1300	2310	
F 10 2_25.8	25.8	109	123	1.5	1090	1890	54	140	0.84	1300	2430	
F 10 2_29.6	29.6	94	132	1.4	1060	1970	47	140	0.73	1300	2560	
F 10 2_33.0	33.0	85	137	1.3	1070	2040	42	140	0.65	1300	2670	417
F 10 2_35.3	35.3	79	140	1.2	1060	2090	40	140	0.61	1300	2740	
F 10 2_39.6	39.6	71	140	1.1	1080	2190	35	140	0.54	1300	2800	
F 10 2_44.7	44.7	63	140	0.97	1080	2290	31	140	0.48	1300	2800	
F 10 2_48.7	48.7	57	140	0.89	1090	2370	28.7	140	0.44	1300	2800	
F 10 2_56.7	56.7	49	140	0.76	1100	2520	24.7	140	0.38	1300	2800	
F 10 2_63.0	63.0	44	140	0.69	1110	2620	22.2	140	0.34	1300	2800	
F 10 2_71.1	71.1	39	140	0.61	1000	2750	19.7	140	0.30	1300	2800	
F 10 2_81.3	81.3	34	140	0.53	1110	2800	17.2	140	0.27	1300	2800	
F 10 2_91.5	91.5	31	140	0.47	1110	2800	15.3	140	0.24	1300	2800	
F 10 2_106.0	106.0	26.4	140	0.41	1120	2800	13.2	140	0.20	1300	2800	
F 10 2_127.1	127.1	22.0	140	0.34	1130	2800	11.0	140	0.17	1300	2800	

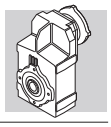

F 10 — 140 Nm

	i	n_1 = 900 min^{-1}					n_1 = 500 min^{-1}					
		n_2 min^{-1}	M_{n2} Nm	P_{n1} kW	R_{n1} N	R_{n2} N	n_2 min^{-1}	M_{n2} Nm	P_{n1} kW	R_{n1} N	R_{n2} N	
F 10 2_7.4	7.4	122	91	1.2	1300	1890	68	111	0.83	1300	2300	
F 10 2_8.6	8.6	105	94	1.1	1300	1970	58	112	0.72	1300	2430	
F 10 2_9.8	9.8	92	107	1.1	1300	2050	51	130	0.73	1300	2490	
F 10 2_11.5	11.5	78	110	0.95	1300	2180	43	131	0.63	1300	2660	
F 10 2_13.0	13.0	69	124	0.94	1300	2240	38	140	0.59	1300	2800	
F 10 2_14.6	14.6	61	138	0.93	1300	2320	34	140	0.53	1300	2800	
F 10 2_17.0	17.0	53	140	0.82	1300	2450	29.5	140	0.46	1300	2800	
F 10 2_19.3	19.3	47	140	0.72	1300	2580	25.9	140	0.40	1300	2800	
F 10 2_22.8	22.8	39	140	0.61	1300	2750	21.9	140	0.34	1300	2800	
F 10 2_25.8	25.8	35	140	0.54	1300	2800	19.4	140	0.30	1300	2800	
F 10 2_29.6	29.6	30	140	0.47	1300	2800	16.9	140	0.26	1300	2800	
F 10 2_33.0	33.0	27.3	140	0.42	1300	2800	15.2	140	0.23	1300	2800	417
F 10 2_35.3	35.3	25.5	140	0.39	1300	2800	14.1	140	0.22	1300	2800	
F 10 2_39.6	39.6	22.7	140	0.35	1300	2800	12.6	140	0.19	1300	2800	
F 10 2_44.7	44.7	20.1	140	0.31	1300	2800	11.2	140	0.17	1300	2800	
F 10 2_48.7	48.7	18.5	140	0.29	1300	2800	10.3	140	0.16	1300	2800	
F 10 2_56.7	56.7	15.9	140	0.24	1300	2800	8.8	140	0.14	1300	2800	
F 10 2_63.0	63.0	14.3	140	0.22	1300	2800	7.9	140	0.12	1300	2800	
F 10 2_71.1	71.1	12.7	140	0.20	1300	2800	7.0	140	0.11	1300	2800	
F 10 2_81.3	81.3	11.1	140	0.17	1300	2800	6.1	140	0.09	1300	2800	
F 10 2_91.5	91.5	9.8	140	0.15	1300	2800	5.5	140	0.08	1300	2800	
F 10 2_106.0	106.0	8.5	140	0.13	1300	2800	4.7	140	0.07	1300	2800	
F 10 2_127.1	127.1	7.1	140	0.11	1300	2800	3.9	140	0.06	1300	2800	

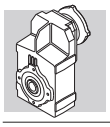

F 20 — 250 Nm

	i	n_1 = 2800 min^{-1}					n_1 = 1400 min^{-1}					
		n_2 min^{-1}	M_{n2} Nm	P_{n1} kW	R_{n1} N	R_{n2} N	n_2 min^{-1}	M_{n2} Nm	P_{n1} kW	R_{n1} N	R_{n2} N	
F 20 2_6.4	6.4	437	103	5.0	—	1370	218	130	3.1	—	1720	
F 20 2_7.8	7.8	357	115	4.5	—	1440	179	144	2.8	—	1820	
F 20 2_8.7	8.7	321	123	4.3	—	1490	160	155	2.7	—	1870	
F 20 2_10.0	10.0	279	131	4.0	—	1550	140	165	2.5	—	1950	
F 20 2_11.2	11.2	249	141	3.9	—	1590	125	177	2.4	—	2010	
F 20 2_14.8	14.8	189	166	3.5	760	1740	95	203	2.1	1010	2210	
F 20 2_18.1	18.1	155	175	3.0	750	1870	77	213	1.8	1020	2380	
F 20 2_20.2	20.2	139	182	2.8	810	1940	69	223	1.7	1070	2460	
F 20 2_23.1	23.1	121	190	2.5	770	2030	60	235	1.6	1000	2570	
F 20 2_25.9	25.9	108	196	2.3	830	2110	54	240	1.4	1100	2680	
F 20 2_30.4	30.4	92	205	2.1	780	2230	46	250	1.3	1050	2840	
F 20 2_33.1	33.1	85	210	2.0	800	2300	42	250	1.2	1120	2940	
F 20 2_37.9	37.9	74	220	1.8	740	2400	37	250	1.0	1130	3110	
F 20 2_41.8	41.8	67	225	1.7	780	2490	33	250	0.92	1220	3240	
F 20 2_44.8	44.8	62	235	1.6	690	2540	31	250	0.86	1200	3330	
F 20 2_50.7	50.7	55	238	1.4	780	2660	27.6	250	0.76	1320	3500	
F 20 2_56.7	56.7	49	250	1.4	730	2750	24.7	250	0.68	1360	3660	
F 20 2_61.9	61.9	45	250	1.2	750	2860	22.6	250	0.62	1370	3790	
F 20 2_69.1	69.1	40	250	1.1	760	2990	20.2	250	0.56	1370	3950	421
F 20 2_76.8	76.8	36	250	1.0	780	3130	18.2	250	0.50	1380	4000	
F 20 2_90.4	90.4	31	250	0.85	830	3340	15.5	250	0.43	1390	4000	
F 20 2_101.6	101.6	27.5	250	0.76	830	3500	13.8	250	0.38	1390	4000	
F 20 2_114.3	114.3	24.5	250	0.67	850	3670	12.2	250	0.34	1400	4000	
F 20 2_132.2	132.2	21.2	250	0.58	870	3890	10.6	250	0.29	1400	4000	
F 20 3_156.3	156.3	17.9	250	0.50	1170	4000	9.0	250	0.25	1300	4000	
F 20 3_172.6	172.6	16.2	250	0.46	1200	4000	8.1	250	0.23	1300	4000	
F 20 3_184.9	184.9	15.1	250	0.43	1210	4000	7.6	250	0.21	1300	4000	
F 20 3_209.3	209.3	13.4	250	0.38	1240	4000	6.7	250	0.19	1300	4000	
F 20 3_234.0	234.0	12.0	250	0.34	1270	4000	6.0	250	0.17	1300	4000	
F 20 3_255.3	255.3	11.0	250	0.31	1280	4000	5.5	250	0.15	1300	4000	
F 20 3_285.2	285.2	9.8	250	0.28	1300	4000	4.9	250	0.14	1300	4000	
F 20 3_316.9	316.9	8.8	250	0.25	1300	4000	4.4	250	0.12	1300	4000	
F 20 3_372.9	372.9	7.5	250	0.21	1300	4000	3.8	250	0.11	1300	4000	
F 20 3_419.3	419.3	6.7	250	0.19	1300	4000	3.3	250	0.09	1300	4000	
F 20 3_471.7	471.7	5.9	250	0.17	1300	4000	3.0	250	0.08	1300	4000	
F 20 3_545.3	545.3	5.1	250	0.14	1300	4000	2.6	250	0.07	1300	4000	

(—) Contact our technical service department advising radial load data (rotation direction, orientation, position)

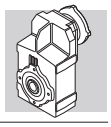

F 20 — 250 Nm

	i	n_1 = 900 min^{-1}					n_1 = 500 min^{-1}					
		n_2 min^{-1}	M_{n2} Nm	P_{n1} kW	R_{n1} N	R_{n2} N	n_2 min^{-1}	M_{n2} Nm	P_{n1} kW	R_{n1} N	R_{n2} N	
F 20 2_6.4	6.4	140	150	2.3	—	1990	218	183	4.4	—	2420	
F 20 2_7.8	7.8	115	167	2.1	—	2110	64	189	1.3	—	2610	
F 20 2_8.7	8.7	103	180	2.0	—	2170	57	219	1.4	—	2640	
F 20 2_10.0	10.0	90	191	1.9	—	2260	50	221	1.2	—	2790	
F 20 2_11.2	11.2	80	205	1.8	—	2330	45	250	1.2	—	2830	
F 20 2_14.8	14.8	61	232	1.6	1210	2570	34	250	0.93	1790	3230	
F 20 2_18.1	18.1	50	250	1.4	1150	2740	27.7	250	0.76	1910	3500	
F 20 2_20.2	20.2	45	250	1.2	1320	2870	24.8	250	0.68	1960	3650	
F 20 2_23.1	23.1	39	250	1.1	1350	3040	21.6	250	0.60	1970	3860	
F 20 2_25.9	25.9	35	250	0.96	1500	3190	19.3	250	0.53	2010	4000	
F 20 2_30.4	30.4	29.6	250	0.82	1530	3400	16.5	250	0.45	2020	4000	
F 20 2_33.1	33.1	27.2	250	0.75	1580	3520	15.1	250	0.42	2040	4000	
F 20 2_37.9	37.9	23.8	250	0.65	1590	3720	13.2	250	0.36	2040	4000	
F 20 2_41.8	41.8	21.5	250	0.59	1610	3870	12.0	250	0.33	2070	4000	
F 20 2_44.8	44.8	20.1	250	0.55	1610	3970	11.2	250	0.31	2060	4000	
F 20 2_50.7	50.7	17.7	250	0.49	1640	4000	9.9	250	0.27	2090	4000	
F 20 2_56.7	56.7	15.9	250	0.44	1650	4000	8.8	250	0.24	2110	4000	
F 20 2_61.9	61.9	14.5	250	0.40	1660	4000	8.1	250	0.22	2110	4000	
F 20 2_69.1	69.1	13.0	250	0.36	1660	4000	7.2	250	0.20	2110	4000	421
F 20 2_76.8	76.8	11.7	250	0.32	1670	4000	6.5	250	0.18	2120	4000	
F 20 2_90.4	90.4	10.0	250	0.27	1680	4000	5.5	250	0.15	2130	4000	
F 20 2_101.6	101.6	8.9	250	0.24	1680	4000	4.9	250	0.14	2130	4000	
F 20 2_114.3	114.3	7.9	250	0.22	1690	4000	4.4	250	0.12	2140	4000	
F 20 2_132.2	132.2	6.8	250	0.19	1690	4000	3.8	250	0.10	2150	4000	
F 20 3_156.3	156.3	5.8	250	0.16	1300	4000	3.2	250	0.09	1300	4000	
F 20 3_172.6	172.6	5.2	250	0.15	1300	4000	2.9	250	0.08	1300	4000	
F 20 3_184.9	184.9	4.9	250	0.14	1300	4000	2.7	250	0.08	1300	4000	
F 20 3_209.3	209.3	4.3	250	0.12	1300	4000	2.4	250	0.07	1300	4000	
F 20 3_234.0	234.0	3.8	250	0.11	1300	4000	2.1	250	0.06	1300	4000	
F 20 3_255.3	255.3	3.5	250	0.10	1300	4000	2.0	250	0.06	1300	4000	
F 20 3_285.2	285.2	3.2	250	0.09	1300	4000	1.8	250	0.05	1300	4000	
F 20 3_316.9	316.9	2.8	250	0.08	1300	4000	1.6	250	0.04	1300	4000	
F 20 3_372.9	372.9	2.4	250	0.07	1300	4000	1.3	250	0.04	1300	4000	
F 20 3_419.3	419.3	2.1	250	0.06	1300	4000	1.2	250	0.03	1300	4000	
F 20 3_471.7	471.7	1.9	250	0.05	1300	4000	1.1	250	0.03	1300	4000	
F 20 3_545.3	545.3	1.7	250	0.05	1300	4000	0.92	250	0.03	1300	4000	

(—) Contact our technical service department advising radial load data (rotation direction, orientation, position)

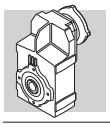

F 25 — 400 Nm

	i	n_1 = 2800 min^{-1}					n_1 = 1400 min^{-1}					
		n_2 min^{-1}	M_{n2} Nm	P_{n1} kW	R_{n1} N	R_{n2} N	n_2 min^{-1}	M_{n2} Nm	P_{n1} kW	R_{n1} N	R_{n2} N	
F 25 2_6.9	6.9	408	155	7.0	—	1840	204	195	4.4	—	2320	425
F 25 2_8.4	8.4	334	170	6.3	—	1950	167	215	4.0	—	2450	
F 25 2_9.4	9.4	299	180	5.9	—	2010	150	225	3.7	—	2540	
F 25 2_10.6	10.6	264	240	7.0	—	1850	132	305	4.4	—	2320	
F 25 2_13.0	13.0	216	255	6.1	—	1990	108	320	3.8	—	2510	
F 25 2_14.5	14.5	194	260	5.5	—	2080	97	330	3.5	—	2610	
F 25 2_16.6	16.6	168	270	5.0	—	2190	84	340	3.2	—	2760	
F 25 2_18.6	18.6	150	280	4.6	—	2270	75	350	2.9	—	2870	
F 25 2_21.8	21.8	128	280	4.0	—	2460	64	355	2.5	250	3090	
F 25 2_23.8	23.8	118	285	3.7	250	2540	59	360	2.3	300	3200	
F 25 2_27.2	27.2	103	290	3.3	250	2690	51	365	2.1	320	3400	
F 25 2_30.0	30.0	93	295	3.0	310	2800	47	370	1.9	410	3540	
F 25 2_32.2	32.2	87	295	2.8	310	2900	44	370	1.8	410	3660	
F 25 2_36.4	36.4	77	295	2.5	460	3070	38	370	1.6	600	3880	
F 25 2_40.7	40.7	69	295	2.2	560	3230	34	370	1.4	720	4080	
F 25 2_44.4	44.4	63	295	2.0	720	3360	32	370	1.3	720	4250	
F 25 3_45.6	45.6	61	340	2.4	1440	3100	31	400	1.4	1830	4030	
F 25 3_50.8	50.8	55	350	2.2	1450	3230	27.6	400	1.2	1850	4250	
F 25 3_58.3	58.3	48	365	2.0	1450	3390	24.0	400	1.1	1860	4530	
F 25 3_65.3	65.3	43	375	1.8	1450	3530	21.4	400	0.97	1870	4780	
F 25 3_76.6	76.6	37	395	1.6	1450	3730	18.3	400	0.82	1880	5140	
F 25 3_83.4	83.4	34	400	1.5	1450	3860	16.8	400	0.76	1880	5330	
F 25 3_95.5	95.5	29.3	400	1.3	1460	4130	14.7	400	0.66	1890	5660	
F 25 3_105.4	105.4	26.6	400	1.2	1470	4320	13.3	400	0.60	1890	5910	
F 25 3_113.0	113.0	24.8	400	1.1	1470	4470	12.4	400	0.56	1890	6090	
F 25 3_127.8	127.8	21.9	400	0.99	1480	4730	11.0	400	0.49	1900	6430	
F 25 3_143.0	143.0	19.6	400	0.88	1480	4980	9.8	400	0.44	1910	6500	
F 25 3_155.9	155.9	18.0	400	0.81	1480	5180	9.0	400	0.40	1910	6500	
F 25 3_174.2	174.2	16.1	400	0.72	1490	5440	8.0	400	0.36	1910	6500	
F 25 3_193.6	193.6	14.5	400	0.65	1490	5700	7.2	400	0.33	1910	6500	
F 25 3_227.8	227.8	12.3	400	0.55	1490	6120	6.1	400	0.28	1920	6500	
F 25 3_256.1	256.1	10.9	400	0.49	1490	6430	5.5	400	0.25	1920	6500	
F 25 3_288.1	288.1	9.7	400	0.44	1490	6500	4.9	400	0.22	1920	6500	
F 25 3_333.1	333.1	8.4	400	0.38	1500	6500	4.2	400	0.19	1930	6500	
F 25 4_393.9	393.9	7.1	400	0.33	1270	6500	3.6	400	0.17	1300	6500	
F 25 4_434.9	434.9	6.4	400	0.30	1290	6500	3.2	400	0.15	1300	6500	
F 25 4_466.0	466.0	6.0	400	0.28	1300	6500	3.0	400	0.14	1300	6500	
F 25 4_527.3	527.3	5.3	400	0.25	1300	6500	2.7	400	0.12	1300	6500	
F 25 4_589.7	589.7	4.7	400	0.22	1300	6500	2.4	400	0.11	1300	6500	
F 25 4_643.3	643.3	4.4	400	0.20	1300	6500	2.2	400	0.10	1300	6500	
F 25 4_718.7	718.7	3.9	400	0.18	1300	6500	1.9	400	0.09	1300	6500	
F 25 4_798.5	798.5	3.5	400	0.16	1300	6500	1.8	400	0.08	1300	6500	
F 25 4_939.8	939.8	3.0	400	0.14	1300	6500	1.5	400	0.07	1300	6500	
F 25 4_1057	1057	2.7	400	0.12	1300	6500	1.3	400	0.06	1300	6500	
F 25 4_1189	1189	2.4	400	0.11	1300	6500	1.2	400	0.05	1300	6500	
F 25 4_1374	1374	2.0	400	0.09	1300	6500	1.0	400	0.05	1300	6500	

(—) Contact our technical service department advising radial load data (rotation direction, orientation, position)

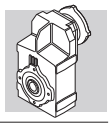

F 25 — 400 Nm

	i	n_1 = 900 min^{-1}					n_1 = 500 min^{-1}					
		n_2 min^{-1}	M_{n2} Nm	P_{n1} kW	R_{n1} N	R_{n2} N	n_2 min^{-1}	M_{n2} Nm	P_{n1} kW	R_{n1} N	R_{n2} N	
F 25 2_6.9	6.9	131	225	3.2	—	2690	73	255	2.0	370	3350	425
F 25 2_8.4	8.4	107	250	3.0	—	2840	60	260	1.7	590	3630	
F 25 2_9.4	9.4	96	260	2.8	—	2940	53	265	1.6	820	3780	
F 25 2_10.6	10.6	85	355	3.3	—	2680	47	395	2.0	360	3420	
F 25 2_13.0	13.0	69	370	2.8	—	2910	39	400	1.7	620	3750	
F 25 2_14.5	14.5	62	380	2.6	—	3030	35	400	1.5	940	3950	
F 25 2_16.6	16.6	54	395	2.4	—	3190	30	400	1.3	1070	4210	
F 25 2_18.6	18.6	48	400	2.1	300	3350	26.9	400	1.2	1330	4440	
F 25 2_21.8	21.8	41	400	1.8	420	3630	22.9	400	1.0	1450	4770	
F 25 2_23.8	23.8	38	400	1.7	530	3780	21.0	400	0.93	1560	4950	
F 25 2_27.2	27.2	33	400	1.5	610	4030	18.4	400	0.81	1640	5260	
F 25 2_30.0	30.0	30	400	1.3	760	4220	16.6	400	0.73	1790	5490	
F 25 2_32.2	32.2	28.0	400	1.2	760	4360	15.5	400	0.69	1790	5660	
F 25 2_36.4	36.4	24.7	400	1.1	970	4610	13.7	400	0.61	2000	5970	
F 25 2_40.7	40.7	22.1	375	0.91	1330	4950	12.3	375	0.51	2000	6360	
F 25 2_44.4	44.4	20.3	385	0.86	1230	5100	11.3	385	0.48	2000	6500	
F 25 3_45.6	45.6	19.8	400	0.89	2160	4960	11.0	400	0.49	2200	6420	
F 25 3_50.8	50.8	17.7	400	0.80	2180	5210	9.8	400	0.44	2200	6500	
F 25 3_58.3	58.3	15.4	400	0.69	2190	5540	8.6	400	0.39	2200	6500	
F 25 3_65.3	65.3	13.8	400	0.62	2200	5820	7.7	400	0.34	2200	6500	
F 25 3_76.6	76.6	11.8	400	0.53	2200	6240	6.5	400	0.29	2200	6500	
F 25 3_83.4	83.4	10.8	400	0.49	2200	6470	6.0	400	0.27	2200	6500	
F 25 3_95.5	95.5	9.4	400	0.42	2200	6500	5.2	400	0.24	2200	6500	
F 25 3_105.4	105.4	8.5	400	0.38	2200	6500	4.7	400	0.21	2200	6500	
F 25 3_113.0	113.0	8.0	400	0.36	2200	6500	4.4	400	0.20	2200	6500	
F 25 3_127.8	127.8	7.0	400	0.32	2200	6500	3.9	400	0.18	2200	6500	
F 25 3_143.0	143.0	6.3	400	0.28	2200	6500	3.5	400	0.16	2200	6500	
F 25 3_155.9	155.9	5.8	400	0.26	2200	6500	3.2	400	0.14	2200	6500	
F 25 3_174.2	174.2	5.2	400	0.23	2200	6500	2.9	400	0.13	2200	6500	
F 25 3_193.6	193.6	4.6	400	0.21	2200	6500	2.6	400	0.12	2200	6500	
F 25 3_227.8	227.8	4.0	400	0.18	2200	6500	2.2	400	0.10	2200	6500	
F 25 3_256.1	256.1	3.5	400	0.16	2200	6500	2.0	400	0.09	2200	6500	
F 25 3_288.1	288.1	3.1	400	0.14	2200	6500	1.7	400	0.08	2200	6500	
F 25 3_333.1	333.1	2.7	400	0.12	2200	6500	1.5	400	0.07	2200	6500	
F 25 4_393.9	393.9	2.3	400	0.11	1300	6500	1.3	400	0.06	1300	6500	
F 25 4_434.9	434.9	2.1	400	0.10	1300	6500	1.1	400	0.05	1300	6500	
F 25 4_466.0	466.0	1.9	400	0.09	1300	6500	1.1	400	0.05	1300	6500	
F 25 4_527.3	527.3	1.7	400	0.08	1300	6500	0.95	400	0.04	1300	6500	
F 25 4_589.7	589.7	1.5	400	0.07	1300	6500	0.85	400	0.04	1300	6500	
F 25 4_643.3	643.3	1.4	400	0.07	1300	6500	0.78	400	0.04	1300	6500	
F 25 4_718.7	718.7	1.3	400	0.06	1300	6500	0.70	400	0.03	1300	6500	
F 25 4_798.5	798.5	1.1	400	0.05	1300	6500	0.63	400	0.03	1300	6500	
F 25 4_939.8	939.8	0.96	400	0.04	1300	6500	0.53	400	0.02	1300	6500	
F 25 4_1057	1057	0.85	400	0.04	1300	6500	0.47	400	0.02	1300	6500	
F 25 4_1189	1189	0.76	400	0.04	1300	6500	0.42	400	0.02	1300	6500	
F 25 4_1374	1374	0.65	400	0.03	1300	6500	0.36	400	0.02	1300	6500	

(—) Contact our technical service department advising radial load data (rotation direction, orientation, position)

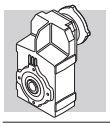

F 31 — 600 Nm

	i	n_1 = 2800 min^{-1}					n_1 = 1400 min^{-1}					
		n_2 min^{-1}	M_{n2} Nm	P_{n1} kW	R_{n1} N	R_{n2} N	n_2 min^{-1}	M_{n2} Nm	P_{n1} kW	R_{n1} N	R_{n2} N	
F 31 2_6.9	6.9	403	295	13.1	—	2710	201	360	8.0	—	3460	429
F 31 2_8.2	8.2	340	310	11.6	—	2880	170	375	7.0	—	3690	
F 31 2_9.0	9.0	311	310	10.6	—	3000	155	385	6.6	390	3810	
F 31 2_10.7	10.7	261	450	12.9	—	2790	130	525	7.5	500	3670	
F 31 2_12.7	12.7	220	475	11.5	—	2950	110	555	6.7	490	3880	
F 31 2_13.9	13.9	201	475	10.5	290	3100	100	570	6.3	650	4010	
F 31 2_16.8	16.8	167	475	8.7	510	3410	83	595	5.5	680	4310	
F 31 2_18.5	18.5	151	475	7.9	730	3580	76	600	5.0	910	4510	
F 31 2_21.1	21.1	133	475	6.9	830	3830	66	600	4.4	1030	4820	
F 31 2_23.4	23.4	120	475	6.3	1020	4020	60	600	4.0	1270	5060	
F 31 2_27.3	27.3	103	475	5.4	1100	4330	51	600	3.4	1380	5450	
F 31 2_30.1	30.1	93	475	4.9	1270	4540	46	600	3.1	1590	5710	
F 31 2_34.4	34.4	81	475	4.3	1330	4820	41	600	2.7	1660	6070	
F 31 2_37.7	37.7	74	475	3.9	1430	5030	37	600	2.5	1800	6330	
F 31 2_40.4	40.4	69	475	3.6	1440	5190	35	600	2.3	1800	6500	
F 31 2_44.6	44.6	63	475	3.3	1540	5430	31	600	2.1	1930	6500	
F 31 3_47.5	47.5	59	475	3.1	2110	5490	29.4	580	1.9	2200	6500	
F 31 3_52.1	52.1	54	485	2.9	2120	5680	26.9	600	1.8	2200	6500	
F 31 3_62.8	62.8	45	515	2.6	2120	6040	22.3	600	1.5	2200	6500	
F 31 3_69.1	69.1	41	530	2.4	2130	6250	20.3	600	1.4	2200	6500	
F 31 3_78.9	78.9	36	550	2.2	2120	6500	17.8	600	1.2	2200	6500	
F 31 3_87.4	87.4	32	570	2.1	2130	6500	16.0	600	1.1	2200	6500	
F 31 3_101.9	101.9	27.5	595	1.8	2130	6500	13.7	600	0.93	2200	6500	
F 31 3_112.5	112.5	24.9	600	1.7	2130	6500	12.4	600	0.84	2200	6500	
F 31 3_128.4	128.4	21.8	600	1.5	2140	6500	10.9	600	0.74	2200	6500	
F 31 3_140.7	140.7	19.9	600	1.3	2140	6500	9.9	600	0.67	2200	6500	
F 31 3_150.8	150.8	18.6	600	1.3	2140	6500	9.3	600	0.63	2200	6500	
F 31 3_166.8	166.8	16.8	600	1.1	2150	6500	8.4	600	0.57	2200	6500	
F 31 3_185.4	185.4	15.1	600	1.0	2160	6500	7.5	600	0.51	2200	6500	
F 31 3_202.3	202.3	13.8	600	0.94	2160	6500	6.9	600	0.47	2200	6500	
F 31 3_228.2	228.2	12.3	600	0.83	2160	6500	6.1	600	0.41	2200	6500	
F 31 3_253.6	253.6	11.0	600	0.75	2160	6500	5.5	600	0.37	2200	6500	
F 31 3_293.8	293.8	9.5	600	0.64	2170	6500	4.8	600	0.32	2200	6500	
F 31 3_332.8	332.8	8.4	600	0.57	2170	6500	4.2	600	0.28	2200	6500	
F 31 3_374.4	374.4	7.5	600	0.51	2170	6500	3.7	600	0.25	2200	6500	
F 31 4_418.9	418.9	6.7	600	0.47	1230	6500	3.3	600	0.23	1300	6500	
F 31 4_462.6	462.6	6.1	600	0.42	1250	6500	3.0	600	0.21	1300	6500	
F 31 4_527.8	527.8	5.3	600	0.37	1270	6500	2.7	600	0.19	1300	6500	
F 31 4_578.6	578.6	4.8	600	0.34	1290	6500	2.4	600	0.17	1300	6500	
F 31 4_619.9	619.9	4.5	600	0.32	1300	6500	2.3	600	0.16	1300	6500	
F 31 4_685.6	685.6	4.1	600	0.29	1300	6500	2.0	600	0.14	1300	6500	
F 31 4_762.3	762.3	3.7	600	0.26	1300	6500	1.8	600	0.13	1300	6500	
F 31 4_831.6	831.6	3.4	600	0.24	1300	6500	1.7	600	0.12	1300	6500	
F 31 4_938.2	938.2	3.0	600	0.21	1300	6500	1.5	600	0.10	1300	6500	
F 31 4_1042	1042	2.7	600	0.19	1300	6500	1.3	600	0.09	1300	6500	
F 31 4_1208	1208	2.3	600	0.16	1300	6500	1.2	600	0.08	1300	6500	
F 31 4_1368	1368	2.0	600	0.14	1300	6500	1.0	600	0.07	1300	6500	
F 31 4_1539	1539	1.8	600	0.13	1300	6500	0.91	600	0.06	1300	6500	

(—) Contact our technical service department advising radial load data (rotation direction, orientation, position)

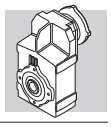

F 31 600 Nm

	i	n_1 = 900 min^{-1}					n_1 = 500 min^{-1}					
		n_2 min^{-1}	M_{n2} Nm	P_{n1} kW	R_{n1} N	R_{n2} N	n_2 min^{-1}	M_{n2} Nm	P_{n1} kW	R_{n1} N	R_{n2} N	
F 31 2_6.9	6.9	130	390	5.6	640	4120	72	390	3.1	2200	5350	429
F 31 2_8.2	8.2	109	390	4.7	990	4450	61	390	2.6	2200	5760	
F 31 2_9.0	9.0	100	390	4.3	1320	4640	55	390	2.4	2200	5980	
F 31 2_10.7	10.7	84	600	5.5	670	4280	47	600	3.1	2200	5710	
F 31 2_12.7	12.7	71	600	4.7	1020	4670	39	600	2.6	2200	6170	
F 31 2_13.9	13.9	65	600	4.3	1350	4880	36	600	2.4	2200	6440	
F 31 2_16.8	16.8	54	600	3.5	1640	5340	29.8	600	2.0	2200	6500	
F 31 2_18.5	18.5	49	600	3.2	1915	5580	27.0	600	1.8	2200	6500	
F 31 2_21.1	21.1	43	600	2.8	2040	5950	23.7	600	1.6	2200	6500	
F 31 2_23.4	23.4	38	600	2.5	2200	6230	21.4	600	1.4	2200	6500	
F 31 2_27.3	27.3	33	600	2.2	2200	6500	18.3	600	1.2	2200	6500	
F 31 2_30.1	30.1	29.9	600	2.0	2200	6500	16.6	600	1.1	2200	6500	
F 31 2_34.4	34.4	26.2	600	1.7	2200	6500	14.6	600	0.96	2200	6500	
F 31 2_37.7	37.7	23.9	600	1.6	2200	6500	13.3	600	0.88	2200	6500	
F 31 2_40.4	40.4	22.3	600	1.5	2200	6500	12.4	600	0.82	2200	6500	
F 31 2_44.6	44.6	20.2	600	1.3	2200	6500	11.2	600	0.74	2200	6500	
F 31 3_47.5	47.5	18.9	600	1.3	2200	6500	10.5	600	0.71	2200	6500	
F 31 3_52.1	52.1	17.3	600	1.2	2200	6500	9.6	600	0.65	2200	6500	
F 31 3_62.8	62.8	14.3	600	0.97	2200	6500	8.0	600	0.54	2200	6500	
F 31 3_69.1	69.1	13.0	600	0.88	2200	6500	7.2	600	0.49	2200	6500	
F 31 3_78.9	78.9	11.4	600	0.77	2200	6500	6.3	600	0.43	2200	6500	
F 31 3_87.4	87.4	10.3	600	0.70	2200	6500	5.7	600	0.39	2200	6500	
F 31 3_101.9	101.9	8.8	600	0.60	2200	6500	4.9	600	0.33	2200	6500	
F 31 3_112.5	112.5	8.0	600	0.54	2200	6500	4.4	600	0.30	2200	6500	
F 31 3_128.4	128.4	7.0	600	0.47	2200	6500	3.9	600	0.26	2200	6500	
F 31 3_140.7	140.7	6.4	600	0.43	2200	6500	3.6	600	0.24	2200	6500	
F 31 3_150.8	150.8	6.0	600	0.40	2200	6500	3.3	600	0.22	2200	6500	
F 31 3_166.8	166.8	5.4	600	0.36	2200	6500	3.0	600	0.20	2200	6500	
F 31 3_185.4	185.4	4.9	600	0.33	2200	6500	2.7	600	0.18	2200	6500	
F 31 3_202.3	202.3	4.4	600	0.30	2200	6500	2.5	600	0.17	2200	6500	
F 31 3_228.2	228.2	3.9	600	0.27	2200	6500	2.2	600	0.15	2200	6500	
F 31 3_253.6	253.6	3.5	600	0.24	2200	6500	2.0	600	0.13	2200	6500	
F 31 3_293.8	293.8	3.1	600	0.21	2200	6500	1.7	600	0.11	2200	6500	
F 31 3_332.8	332.8	2.7	600	0.18	2200	6500	1.5	600	0.10	2200	6500	
F 31 3_374.4	374.4	2.4	600	0.16	2200	6500	1.3	600	0.09	2200	6500	
F 31 4_418.9	418.9	2.1	600	0.15	1300	6500	1.2	600	0.08	1300	6500	
F 31 4_462.6	462.6	1.9	600	0.14	1300	6500	1.1	600	0.08	1300	6500	
F 31 4_527.8	527.8	1.7	600	0.12	1300	6500	0.95	600	0.07	1300	6500	
F 31 4_578.6	578.6	1.6	600	0.11	1300	6500	0.86	600	0.06	1300	6500	
F 31 4_619.9	619.9	1.5	600	0.10	1300	6500	0.81	600	0.06	1300	6500	
F 31 4_685.6	685.6	1.3	600	0.09	1300	6500	0.73	600	0.05	1300	6500	
F 31 4_762.3	762.3	1.2	600	0.08	1300	6500	0.66	600	0.05	1300	6500	
F 31 4_831.6	831.6	1.1	600	0.08	1300	6500	0.60	600	0.04	1300	6500	
F 31 4_938.2	938.2	0.96	600	0.07	1300	6500	0.53	600	0.04	1300	6500	
F 31 4_1042	1042	0.86	600	0.06	1300	6500	0.48	600	0.03	1300	6500	
F 31 4_1208	1208	0.75	600	0.05	1300	6500	0.41	600	0.03	1300	6500	
F 31 4_1368	1368	0.66	600	0.05	1300	6500	0.37	600	0.03	1300	6500	
F 31 4_1539	1539	0.58	600	0.04	1300	6500	0.32	600	0.02	1300	6500	

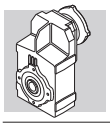

F 41 — 1100 Nm

	i	n_1 = 2800 min^{-1}					n_1 = 1400 min^{-1}					
		n_2 min^{-1}	M_{n2} Nm	P_{n1} kW	R_{n1} N	R_{n2} N	n_2 min^{-1}	M_{n2} Nm	P_{n1} kW	R_{n1} N	R_{n2} N	
F 41 2_6.7	6.7	416	460	21	—	3410	208	580	13.3	—	4290	431
F 41 2_9.1	9.1	306	515	17.4	—	3750	153	650	11.0	—	4730	
F 41 2_10.8	10.8	260	715	21	—	3310	130	900	12.9	—	4170	
F 41 2_14.6	14.6	191	805	17.0	—	3620	96	1015	10.7	—	4560	
F 41 2_17.1	17.1	164	835	15.1	—	3860	82	1055	9.5	—	4850	
F 41 2_18.9	18.9	148	860	14.0	410	4000	74	1085	8.9	500	5030	
F 41 2_24.1	24.1	116	875	11.2	650	4540	58	1100	7.0	840	5730	
F 41 2_30.1	30.1	93	875	9.0	980	5130	46	1100	5.6	1260	6470	
F 41 2_38.2	38.2	73	875	7.1	1260	5810	37	1100	4.4	1600	7330	
F 41 2_47.9	47.9	58	850	5.5	1680	6600	29.2	1070	3.4	2120	8320	
F 41 3_51.5	51.5	54	880	5.4	3030	6750	27.2	1085	3.3	3500	8500	
F 41 3_60.2	60.2	46	930	4.9	3030	7100	23.2	1100	2.9	3500	8500	
F 41 3_66.5	66.5	42	980	4.6	3030	7280	21.1	1100	2.6	3500	8500	
F 41 3_84.9	84.9	33	1065	4.0	3030	7890	16.5	1100	2.0	3500	8500	
F 41 3_106.0	106.0	26.4	1100	3.3	3040	8500	13.2	1100	1.6	3500	8500	
F 41 3_134.4	134.4	20.8	1100	2.6	3050	8500	10.4	1100	1.3	3500	8500	
F 41 3_168.7	168.7	16.6	1100	2.1	3070	8500	8.3	1100	1.0	3500	8500	
F 41 3_180.7	180.7	15.5	1100	1.9	3070	8500	7.7	1100	0.96	3500	8500	
F 41 3_198.9	198.9	14.1	1100	1.7	3080	8500	7.0	1100	0.87	3500	8500	
F 41 3_220.1	220.1	12.7	1100	1.6	3090	8500	6.4	1100	0.79	3500	8500	
F 41 3_240.1	240.1	11.7	1100	1.4	3090	8500	5.8	1100	0.72	3500	8500	
F 41 3_266.9	266.9	10.5	1100	1.3	3090	8500	5.2	1100	0.65	3500	8500	
F 41 3_296.6	296.6	9.4	1100	1.2	3090	8500	4.7	1100	0.58	3500	8500	
F 41 3_344.8	344.8	8.1	1100	1.0	3100	8500	4.1	1100	0.50	3500	8500	
F 41 4_433.7	433.7	6.5	1100	0.83	1480	8500	3.2	1100	0.41	1910	8500	
F 41 4_549.8	549.8	5.1	1100	0.65	1520	8500	2.5	1100	0.33	1940	8500	
F 41 4_690.1	690.1	4.1	1100	0.52	1540	8500	2.0	1100	0.26	1970	8500	
F 41 4_739.4	739.4	3.8	1100	0.48	1550	8500	1.9	1100	0.24	1980	8500	
F 41 4_813.8	813.8	3.4	1100	0.44	1560	8500	1.7	1100	0.22	1990	8500	
F 41 4_900.5	900.5	3.1	1100	0.40	1570	8500	1.6	1100	0.20	2000	8500	
F 41 4_982.4	982.4	2.9	1100	0.36	1570	8500	1.4	1100	0.18	2000	8500	
F 41 4_1092	1092	2.6	1100	0.33	1580	8500	1.3	1100	0.16	2010	8500	
F 41 4_1213	1213	2.3	1100	0.30	1590	8500	1.2	1100	0.15	2020	8500	
F 41 4_1411	1411	2.0	1100	0.25	1600	8500	1.0	1100	0.13	2020	8500	

(—) Contact our technical service department advising radial load data (rotation direction, orientation, position)

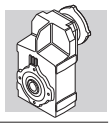

F 41 — 1100 Nm

	i	n_1 = 900 min^{-1}					n_1 = 500 min^{-1}					
		n_2 min^{-1}	M_{n2} Nm	P_{n1} kW	R_{n1} N	R_{n2} N	n_2 min^{-1}	M_{n2} Nm	P_{n1} kW	R_{n1} N	R_{n2} N	
F 41 2_6.7	6.7	134	670	9.9	—	4980	74	700	5.7	1760	6450	431
F 41 2_9.1	9.1	99	700	7.6	680	5660	55	700	4.2	2850	7410	
F 41 2_10.8	10.8	84	1025	9.4	480	4900	46	1100	5.6	1950	6480	
F 41 2_14.6	14.6	62	1100	7.5	860	5550	34	1100	4.1	3030	7590	
F 41 2_17.1	17.1	53	1100	6.4	1230	6060	29.2	1100	3.5	3400	8210	
F 41 2_18.9	18.9	48	1100	5.8	1760	6390	26.5	1100	3.2	3500	8500	
F 41 2_24.1	24.1	37	1100	4.5	2210	7260	20.7	1100	2.5	3500	8500	
F 41 2_30.1	30.1	29.9	1100	3.6	2630	8120	16.6	1100	2.0	3500	8500	
F 41 2_38.2	38.2	23.6	1100	2.9	2970	8500	13.1	1100	1.6	3500	8500	
F 41 2_47.9	47.9	18.8	1070	2.2	3490	8500	10.4	1070	1.2	3500	8500	
F 41 3_51.5	51.5	17.5	1100	2.2	3500	8500	9.7	1100	1.2	3500	8500	
F 41 3_60.2	60.2	14.9	1100	1.9	3500	8500	8.3	1100	1.0	3500	8500	
F 41 3_66.5	66.5	13.5	1100	1.7	3500	8500	7.5	1100	0.93	3500	8500	
F 41 3_84.9	84.9	10.6	1100	1.3	3500	8500	5.9	1100	0.73	3500	8500	
F 41 3_106.0	106.0	8.5	1100	1.1	3500	8500	4.7	1100	0.58	3500	8500	
F 41 3_134.4	134.4	6.7	1100	0.83	3500	8500	3.7	1100	0.46	3500	8500	
F 41 3_168.7	168.7	5.3	1100	0.66	3500	8500	3.0	1100	0.37	3500	8500	
F 41 3_180.7	180.7	5.0	1100	0.62	3500	8500	2.8	1100	0.34	3500	8500	
F 41 3_198.9	198.9	4.5	1100	0.56	3500	8500	2.5	1100	0.31	3500	8500	
F 41 3_220.1	220.1	4.1	1100	0.51	3500	8500	2.3	1100	0.28	3500	8500	
F 41 3_240.1	240.1	3.7	1100	0.46	3500	8500	2.1	1100	0.26	3500	8500	
F 41 3_266.9	266.9	3.4	1100	0.42	3500	8500	1.9	1100	0.23	3500	8500	
F 41 3_296.6	296.6	3.0	1100	0.38	3500	8500	1.7	1100	0.21	3500	8500	
F 41 3_344.8	344.8	2.6	1100	0.32	3500	8500	1.5	1100	0.18	3500	8500	
F 41 4_433.7	433.7	2.1	1100	0.27	2200	8500	1.2	1100	0.15	2200	8500	
F 41 4_549.8	549.8	1.6	1100	0.21	2200	8500	0.91	1100	0.12	2200	8500	
F 41 4_690.1	690.1	1.3	1100	0.17	2200	8500	0.72	1100	0.09	2200	8500	
F 41 4_739.4	739.4	1.2	1100	0.16	2200	8500	0.68	1100	0.09	2200	8500	
F 41 4_813.8	813.8	1.1	1100	0.14	2200	8500	0.61	1100	0.08	2200	8500	
F 41 4_900.5	900.5	1.0	1100	0.13	2200	8500	0.56	1100	0.07	2200	8500	
F 41 4_982.4	982.4	0.92	1100	0.12	2200	8500	0.51	1100	0.07	2200	8500	
F 41 4_1092	1092	0.82	1100	0.11	2200	8500	0.46	1100	0.06	2200	8500	
F 41 4_1213	1213	0.74	1100	0.09	2200	8500	0.41	1100	0.05	2200	8500	
F 41 4_1411	1411	0.64	1100	0.08	2200	8500	0.35	1100	0.05	2200	8500	

(—) Contact our technical service department advising radial load data (rotation direction, orientation, position)

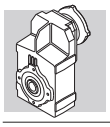

F 51 — 1800 Nm

	i	n_1 = 2800 min^{-1}					n_1 = 1400 min^{-1}					
		n_2 min^{-1}	M_{n2} Nm	P_{n1} kW	R_{n1} N	R_{n2} N	n_2 min^{-1}	M_{n2} Nm	P_{n1} kW	R_{n1} N	R_{n2} N	
F 51 2_7.2	7.2	389	775	33	990	4170	195	975	21	1440	5260	
F 51 2_9.1	9.1	309	875	30	890	4400	155	1100	18.8	1320	5550	
F 51 2_11.1	11.1	252	1055	29	1460	4530	126	1330	18.5	2010	5700	
F 51 2_14.0	14.0	200	1125	25	1580	4920	100	1420	15.7	2150	6200	
F 51 2_18.8	18.8	149	1225	20	1660	5480	74	1545	12.7	2240	6900	
F 51 2_23.8	23.8	118	1310	17.0	1710	5960	59	1650	10.7	2290	7520	
F 51 2_30.0	30.0	93	1350	13.9	1760	6610	47	1700	8.7	2330	8340	
F 51 2_37.1	37.1	75	1350	11.2	1910	7350	38	1700	7.1	2410	9260	
F 51 3_48.9	48.9	57	1505	9.7	2600	7800	28.6	1800	5.8	3310	10100	
F 51 3_65.8	65.8	43	1650	7.9	2610	8640	21.3	1800	4.3	3380	11600	
F 51 3_83.2	83.2	34	1770	6.7	2630	9380	16.8	1800	3.4	3440	12000	
F 51 3_105.1	105.1	26.6	1800	5.4	2650	10400	13.3	1800	2.7	3460	12000	
F 51 3_129.9	129.9	21.6	1800	4.4	2670	11600	10.8	1800	2.2	3490	12000	
F 51 3_165.6	165.6	16.9	1800	3.4	2700	12000	8.5	1800	1.7	3500	12000	
F 51 3_202.4	202.4	13.8	1800	2.8	2710	12000	6.9	1800	1.4	3500	12000	
F 51 3_216.9	216.9	12.9	1800	2.6	2710	12000	6.5	1800	1.3	3500	12000	437
F 51 3_239.8	239.8	11.7	1800	2.4	2730	12000	5.8	1800	1.2	3500	12000	
F 51 3_262.1	262.1	10.7	1800	2.2	2730	12000	5.3	1800	1.1	3500	12000	
F 51 3_285.9	285.9	9.8	1800	2.0	2730	12000	4.9	1800	0.99	3500	12000	
F 51 3_317.3	317.3	8.8	1800	1.8	2740	12000	4.4	1800	0.89	3500	12000	
F 51 3_352.5	352.5	7.9	1800	1.6	2740	12000	4.0	1800	0.80	3500	12000	
F 51 4_429.1	429.1	6.5	1800	1.4	1930	12000	3.3	1800	0.68	2200	12000	
F 51 4_530.5	530.5	5.3	1800	1.1	1970	12000	2.6	1800	0.55	2200	12000	
F 51 4_676.3	676.3	4.1	1800	0.87	2020	12000	2.1	1800	0.43	2200	12000	
F 51 4_826.4	826.4	3.4	1800	0.71	2040	12000	1.7	1800	0.35	2200	12000	
F 51 4_885.5	885.5	3.2	1800	0.66	2050	12000	1.6	1800	0.33	2200	12000	
F 51 4_979.4	979.4	2.9	1800	0.60	2060	12000	1.4	1800	0.30	2200	12000	
F 51 4_1070	1070	2.6	1800	0.55	2070	12000	1.3	1800	0.27	2200	12000	
F 51 4_1168	1168	2.4	1800	0.50	2080	12000	1.2	1800	0.25	2200	12000	
F 51 4_1296	1296	2.2	1800	0.45	2090	12000	1.1	1800	0.23	2200	12000	
F 51 4_1439	1439	1.9	1800	0.41	2100	12000	1.0	1800	0.20	2200	12000	

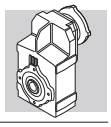

F 51 — 1800 Nm

	i	n_1 = 900 min^{-1}					n_1 = 500 min^{-1}					
		n_2 min^{-1}	M_{n2} Nm	P_{n1} kW	R_{n1} N	R_{n2} N	n_2 min^{-1}	M_{n2} Nm	P_{n1} kW	R_{n1} N	R_{n2} N	
F 51 2_7.2	7.2	125	1100	15.2	1940	6170	70	1100	8.4	3190	8140	
F 51 2_9.1	9.1	99	1100	12.1	2450	6900	55	1100	6.7	3440	9030	
F 51 2_11.1	11.1	81	1520	13.6	2450	6660	45	1700	8.4	3190	8480	
F 51 2_14.0	14.0	64	1620	11.5	2550	7250	36	1700	6.7	3440	9500	
F 51 2_18.8	18.8	48	1700	9.0	2690	8230	26.6	1700	5.0	3500	10900	
F 51 2_23.8	23.8	38	1700	7.1	2870	9250	21.0	1700	3.9	3500	12000	
F 51 2_30.0	30.0	30	1700	5.6	2960	10300	16.6	1700	3.1	3500	12000	
F 51 2_37.1	37.1	24.2	1700	4.5	3040	11400	13.5	1700	2.5	3500	12000	
F 51 3_48.9	48.9	18.4	1800	3.7	3500	12000	10.2	1800	2.1	3500	12000	
F 51 3_65.8	65.8	13.7	1800	2.8	3500	12000	7.6	1800	1.5	3500	12000	
F 51 3_83.2	83.2	10.8	1800	2.2	3500	12000	6.0	1800	1.2	3500	12000	
F 51 3_105.1	105.1	8.6	1800	1.7	3500	12000	4.8	1800	0.96	3500	12000	
F 51 3_129.9	129.9	6.9	1800	1.4	3500	12000	3.8	1800	0.78	3500	12000	
F 51 3_165.6	165.6	5.4	1800	1.1	3500	12000	3.0	1800	0.61	3500	12000	
F 51 3_202.4	202.4	4.4	1800	0.90	3500	12000	2.5	1800	0.50	3500	12000	
F 51 3_216.9	216.9	4.2	1800	0.84	3500	12000	2.3	1800	0.47	3500	12000	437
F 51 3_239.8	239.8	3.8	1800	0.76	3500	12000	2.1	1800	0.42	3500	12000	
F 51 3_262.1	262.1	3.4	1800	0.70	3500	12000	1.9	1800	0.39	3500	12000	
F 51 3_285.9	285.9	3.1	1800	0.64	3500	12000	1.7	1800	0.35	3500	12000	
F 51 3_317.3	317.3	2.8	1800	0.57	3500	12000	1.6	1800	0.32	3500	12000	
F 51 3_352.5	352.5	2.6	1800	0.52	3500	12000	1.4	1800	0.29	3500	12000	
F 51 4_429.1	429.1	2.1	1800	0.44	2200	12000	1.2	1800	0.24	2200	12000	
F 51 4_530.5	530.5	1.7	1800	0.36	2200	12000	0.94	1800	0.20	2200	12000	
F 51 4_676.3	676.3	1.3	1800	0.28	2200	12000	0.74	1800	0.15	2200	12000	
F 51 4_826.4	826.4	1.1	1800	0.23	2200	12000	0.61	1800	0.13	2200	12000	
F 51 4_885.5	885.5	1.0	1800	0.21	2200	12000	0.56	1800	0.12	2200	12000	
F 51 4_979.4	979.4	0.92	1800	0.19	2200	12000	0.51	1800	0.11	2200	12000	
F 51 4_1070	1070	0.84	1800	0.18	2200	12000	0.47	1800	0.10	2200	12000	
F 51 4_1168	1168	0.77	1800	0.16	2200	12000	0.43	1800	0.09	2200	12000	
F 51 4_1296	1296	0.69	1800	0.15	2200	12000	0.39	1800	0.08	2200	12000	
F 51 4_1439	1439	0.63	1800	0.13	2200	12000	0.35	1800	0.07	2200	12000	

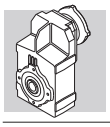

F 60 — 2900 Nm

	i	n_1 = 2800 min^{-1}					n_1 = 1400 min^{-1}					
		n_2 min^{-1}	M_{n2} Nm	P_{n1} kW	R_{n1} N	R_{n2} N	n_2 min^{-1}	M_{n2} Nm	P_{n1} kW	R_{n1} N	R_{n2} N	
F 60 3_9.0	9.0	311	920	32	—	13300	156	1160	20	—	16500	
F 60 3_9.7	9.7	289	1000	33	—	13600	144	1250	20	—	16700	
F 60 3_11.8	11.8	237	1030	28	—	14600	119	1300	17.4	—	17800	
F 60 3_12.7	12.7	220	1110	28	—	14700	110	1400	17.4	—	18000	
F 60 3_14.5	14.5	193	1110	24	—	15500	97	1400	15.3	—	19000	
F 60 3_15.7	15.7	178	1200	24	—	15600	89	1500	15.1	—	19200	
F 60 3_19.1	19.1	147	1200	19.9	—	16800	73	1500	12.4	—	20000	
F 60 3_20.7	20.7	135	1300	19.9	—	17000	68	1640	12.5	—	20000	
F 60 3_23.5	23.5	119	1260	17.0	—	17900	60	1590	10.7	—	20000	
F 60 3_25.4	25.4	110	1370	17.1	—	18100	55	1720	10.7	—	20000	
F 60 3_29.6	29.6	95	2750	29	820	15900	47	2900	15.5	2630	20000	
F 60 3_32.1	32.1	87	2800	28	1290	16200	44	2900	14.3	3260	20000	
F 60 3_38.8	38.8	72	2900	24	1260	17500	36	2900	11.8	3480	20000	
F 60 3_42.1	42.1	67	2900	22	1820	17900	33	2900	10.9	3720	20000	
F 60 3_47.8	47.8	59	2900	19.2	1770	19100	29.3	2900	9.6	3730	20000	
F 60 3_51.8	51.8	54	2900	17.7	2290	19500	27.0	2900	8.9	3830	20000	
F 60 3_63.0	63.0	44	2900	14.6	2310	20000	22.2	2900	7.3	3850	20000	
F 60 3_68.3	68.3	41	2900	13.4	2790	20000	20.5	2900	6.7	3940	20000	
F 60 3_77.6	77.6	36	2900	11.8	2620	20000	18.0	2900	5.9	3920	20000	
F 60 3_84.0	84.0	33	2900	10.9	2960	20000	16.7	2900	5.5	4010	20000	
F 60 3_98.2	98.2	28.5	2900	9.3	2910	20000	14.3	2900	4.7	3980	20000	
F 60 3_106.4	106.4	26.3	2900	8.6	3020	20000	13.2	2900	4.3	4070	20000	
F 60 3_120.5	120.5	23.2	2900	7.6	2970	20000	11.6	2900	3.8	4030	20000	
F 60 3_130.5	130.5	21.5	2900	7.0	3060	20000	10.7	2900	3.5	4110	20000	441
F 60 3_150.4	150.4	18.6	2900	6.1	3010	20000	9.3	2900	3.0	4060	20000	
F 60 3_162.9	162.9	17.2	2900	5.6	3090	20000	8.6	2900	2.8	4140	20000	
F 60 3_185.9	185.9	15.1	2900	4.9	3050	20000	7.5	2900	2.5	4100	20000	
F 60 3_201.4	201.4	13.9	2900	4.6	3130	20000	7.0	2900	2.3	4180	20000	
F 60 3_217.6	217.6	12.9	2900	4.2	3070	20000	6.4	2900	2.1	4120	20000	
F 60 3_235.8	235.8	11.9	2900	3.9	3140	20000	5.9	2900	1.9	4190	20000	
F 60 3_259.1	259.1	10.8	2900	3.5	3080	20000	5.4	2900	1.8	4130	20000	
F 60 3_280.7	280.7	10.0	2900	3.3	3150	20000	5.0	2900	1.6	4200	20000	
F 60 4_315.4	315.4	8.9	2900	3.0	3500	20000	4.4	2900	1.5	3500	20000	
F 60 4_341.7	341.7	8.2	2900	2.8	3500	20000	4.1	2900	1.4	3500	20000	
F 60 4_399.3	399.3	7.0	2900	2.4	3500	20000	3.5	2900	1.2	3500	20000	
F 60 4_432.6	432.6	6.5	2900	2.2	3500	20000	3.2	2900	1.1	3500	20000	
F 60 4_489.8	489.8	5.7	2900	1.9	3500	20000	2.9	2900	0.96	3500	20000	
F 60 4_530.7	530.7	5.3	2900	1.8	3500	20000	2.6	2900	0.89	3500	20000	
F 60 4_611.4	611.4	4.6	2900	1.5	3500	20000	2.3	2900	0.77	3500	20000	
F 60 4_662.4	662.4	4.2	2900	1.4	3500	20000	2.1	2900	0.71	3500	20000	
F 60 4_756.0	756.0	3.7	2900	1.2	3500	20000	1.9	2900	0.62	3500	20000	
F 60 4_819.0	819.0	3.4	2900	1.1	3500	20000	1.7	2900	0.57	3500	20000	
F 60 4_885.1	885.1	3.2	2900	1.1	3500	20000	1.6	2900	0.53	3500	20000	
F 60 4_958.9	958.9	2.9	2900	0.98	3500	20000	1.5	2900	0.49	3500	20000	
F 60 4_1054	1054	2.7	2900	0.89	3500	20000	1.3	2900	0.45	3500	20000	
F 60 4_1141	1141	2.5	2900	0.83	3500	20000	1.2	2900	0.41	3500	20000	

(—) Contact our technical service department advising radial load data (rotation direction, orientation, position)

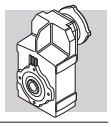

F 60 — 2900 Nm

	i	n_1 = 900 min^{-1}					n_1 = 500 min^{-1}					
		n_2 min^{-1}	M_{n2} Nm	P_{n1} kW	R_{n1} N	R_{n2} N	n_2 min^{-1}	M_{n2} Nm	P_{n1} kW	R_{n1} N	R_{n2} N	
F 60 3_9.0	9.0	100	1340	15.1	—	18800	56	1630	10.2	—	20000	
F 60 3_9.7	9.7	93	1460	15.3	—	19000	52	1780	10.4	—	20000	
F 60 3_11.8	11.8	76	1500	12.9	—	20000	42	1830	8.8	—	20000	
F 60 3_12.7	12.7	71	1620	13.0	—	20000	39	1900	8.4	600	20000	
F 60 3_14.5	14.5	62	1620	11.4	—	20000	34	1900	7.4	490	20000	
F 60 3_15.7	15.7	57	1750	11.3	—	20000	32	1900	6.8	1630	20000	
F 60 3_19.1	19.1	47	1750	9.3	—	20000	26.2	1900	5.6	1660	20000	
F 60 3_20.7	20.7	43	1900	9.3	—	20000	24.2	1900	5.2	2700	20000	
F 60 3_23.5	23.5	38	1840	8.0	—	20000	21.3	1900	4.6	2340	20000	
F 60 3_25.4	25.4	35	1900	7.6	620	20000	19.7	1900	4.2	3330	20000	
F 60 3_29.6	29.6	30	2900	10.0	4220	20000	16.9	2900	5.5	4700	20000	
F 60 3_32.1	32.1	28.0	2900	9.2	4350	20000	15.6	2900	5.1	4700	20000	
F 60 3_38.8	38.8	23.2	2900	7.6	4420	20000	12.9	2900	4.2	4700	20000	
F 60 3_42.1	42.1	21.4	2900	7.0	4530	20000	11.9	2900	3.9	4700	20000	
F 60 3_47.8	47.8	18.8	2900	6.2	4530	20000	10.5	2900	3.4	4700	20000	
F 60 3_51.8	51.8	17.4	2900	5.7	4640	20000	9.7	2900	3.2	4700	20000	
F 60 3_63.0	63.0	14.3	2900	4.7	4660	20000	7.9	2900	2.6	4700	20000	
F 60 3_68.3	68.3	13.2	2900	4.3	4700	20000	7.3	2900	2.4	4700	20000	
F 60 3_77.6	77.6	11.6	2900	3.8	4700	20000	6.4	2900	2.1	4700	20000	
F 60 3_84.0	84.0	10.7	2900	3.5	4700	20000	6.0	2900	1.9	4700	20000	
F 60 3_98.2	98.2	9.2	2900	3.0	4700	20000	5.1	2900	1.7	4700	20000	
F 60 3_106.4	106.4	8.5	2900	2.8	4700	20000	4.7	2900	1.5	4700	20000	
F 60 3_120.5	120.5	7.5	2900	2.4	4700	20000	4.1	2900	1.4	4700	20000	
F 60 3_130.5	130.5	6.9	2900	2.3	4700	20000	3.8	2900	1.3	4700	20000	441
F 60 3_150.4	150.4	6.0	2900	2.0	4700	20000	3.3	2900	1.1	4700	20000	
F 60 3_162.9	162.9	5.5	2900	1.8	4700	20000	3.1	2900	1.0	4700	20000	
F 60 3_185.9	185.9	4.8	2900	1.6	4700	20000	2.7	2900	0.88	4700	20000	
F 60 3_201.4	201.4	4.5	2900	1.5	4700	20000	2.5	2900	0.81	4700	20000	
F 60 3_217.6	217.6	4.1	2900	1.4	4700	20000	2.3	2900	0.75	4700	20000	
F 60 3_235.8	235.8	3.8	2900	1.3	4700	20000	2.1	2900	0.69	4700	20000	
F 60 3_259.1	259.1	3.5	2900	1.1	4700	20000	1.9	2900	0.63	4700	20000	
F 60 3_280.7	280.7	3.2	2900	1.1	4700	20000	1.8	2900	0.58	4700	20000	
F 60 4_315.4	315.4	2.9	2900	0.96	3500	20000	1.6	2900	0.53	3500	20000	
F 60 4_341.7	341.7	2.6	2900	0.89	3500	20000	1.5	2900	0.49	3500	20000	
F 60 4_399.3	399.3	2.3	2900	0.76	3500	20000	1.3	2900	0.42	3500	20000	
F 60 4_432.6	432.6	2.1	2900	0.70	3500	20000	1.2	2900	0.39	3500	20000	
F 60 4_489.8	489.8	1.8	2900	0.62	3500	20000	1.0	2900	0.34	3500	20000	
F 60 4_530.7	530.7	1.7	2900	0.57	3500	20000	0.94	2900	0.32	3500	20000	
F 60 4_611.4	611.4	1.5	2900	0.50	3500	20000	0.82	2900	0.28	3500	20000	
F 60 4_662.4	662.4	1.4	2900	0.46	3500	20000	0.75	2900	0.25	3500	20000	
F 60 4_756.0	756.0	1.2	2900	0.40	3500	20000	0.66	2900	0.22	3500	20000	
F 60 4_819.0	819.0	1.1	2900	0.37	3500	20000	0.61	2900	0.21	3500	20000	
F 60 4_885.1	885.1	1.0	2900	0.34	3500	20000	0.56	2900	0.19	3500	20000	
F 60 4_958.9	958.9	0.94	2900	0.32	3500	20000	0.52	2900	0.18	3500	20000	
F 60 4_1054	1054	0.85	2900	0.29	3500	20000	0.47	2900	0.16	3500	20000	
F 60 4_1141	1141	0.79	2900	0.27	3500	20000	0.44	2900	0.15	3500	20000	

(—) Contact our technical service department advising radial load data (rotation direction, orientation, position)

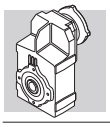

F 70 5000 Nm

	i	n_1 = 2800 min^{-1}					n_1 = 1400 min^{-1}					
		n_2 min^{-1}	M_{n2} Nm	P_{n1} kW	R_{n1} N	R_{n2} N	n_2 min^{-1}	M_{n2} Nm	P_{n1} kW	R_{n1} N	R_{n2} N	
F 70 3_10.0	10.0	280	2600	82	1410	14800	140	3200	51	1750	18200	445
F 70 3_10.9	10.9	257	2800	81	1510	14700	128	3450	50	1840	18100	
F 70 3_12.8	12.8	219	2900	72	860	15700	109	3600	44	880	19300	
F 70 3_13.9	13.9	201	3150	72	810	15600	101	3900	44	880	19100	
F 70 3_16.3	16.3	172	3250	63	570	16600	86	4000	39	710	20500	
F 70 3_17.7	17.7	158	3550	63	430	16400	79	4350	39	630	20200	
F 70 3_20.9	20.9	134	3450	52	690	18000	67	4000	30	2090	22700	
F 70 3_22.6	22.6	124	3750	52	640	17800	62	4350	30	2010	22500	
F 70 3_24.6	24.6	114	3550	46	560	19000	57	4000	26	2510	24200	
F 70 3_27.7	27.7	101	3750	43	5070	19600	51	4650	27	6410	24100	
F 70 3_30.0	30.0	93	4050	43	5080	19400	47	5000	26	6420	23900	
F 70 3_35.4	35.4	79	4150	37	5070	20900	40	5000	22	6440	25900	
F 70 3_38.4	38.4	73	4500	37	5060	20700	36	5000	21	6540	26500	
F 70 3_45.2	45.2	62	4600	32	5080	22200	31	5000	17.5	6590	28700	
F 70 3_49.0	49.0	57	4600	30	5170	22700	28.6	5000	16.1	6680	29300	
F 70 3_57.7	57.7	49	5000	27	5090	23800	24.3	5000	13.7	6680	31600	
F 70 3_62.5	62.5	45	5000	25	5170	24300	22.4	5000	12.7	6760	32300	
F 70 3_67.9	67.9	41	5000	23	5110	25500	20.6	5000	11.6	6710	33600	
F 70 3_73.6	73.6	38	5000	21	5190	26100	19.0	5000	10.7	6790	34400	
F 70 3_85.4	85.4	33	5000	18.5	5190	28000	16.4	5000	9.3	6780	35000	
F 70 3_92.5	92.5	30	5000	17.1	5260	28700	15.1	5000	8.5	6860	35000	
F 70 3_101.2	101.2	27.7	5000	15.6	5220	30000	13.8	5000	7.8	6820	35000	
F 70 3_109.6	109.6	25.5	5000	14.4	5290	30700	12.8	5000	7.2	6890	35000	
F 70 3_122.7	122.7	22.8	5000	12.9	5250	32300	11.4	5000	6.4	6850	35000	
F 70 3_133.0	133.0	21.1	5000	11.9	5320	33100	10.5	5000	5.9	6920	35000	
F 70 3_153.8	153.8	18.2	5000	10.3	5280	35000	9.1	5000	5.1	6880	35000	
F 70 3_166.7	166.7	16.8	5000	9.5	5350	35000	8.4	5000	4.7	6950	35000	
F 70 3_180.9	180.9	15.5	5000	8.7	5310	35000	7.7	5000	4.4	6910	35000	
F 70 3_196.0	196.0	14.3	5000	8.1	5370	35000	7.1	5000	4.0	6970	35000	
F 70 4_216.5	216.5	12.9	5000	7.5	2130	35000	6.5	5000	3.7	2860	35000	
F 70 4_234.6	234.6	11.9	5000	6.9	2130	35000	6.0	5000	3.5	2860	35000	
F 70 4_280.9	280.9	10.0	5000	5.8	2200	35000	5.0	5000	2.9	2940	35000	
F 70 4_304.3	304.3	9.2	5000	5.3	2200	35000	4.6	5000	2.7	2940	35000	
F 70 4_372.5	372.5	7.5	5000	4.4	2260	35000	3.8	5000	2.2	3000	35000	
F 70 4_403.5	403.5	6.9	5000	4.0	2260	35000	3.5	5000	2.0	3000	35000	
F 70 4_471.2	471.2	5.9	5000	3.4	2300	35000	3.0	5000	1.7	3040	35000	
F 70 4_510.4	510.4	5.5	5000	3.2	2300	35000	2.7	5000	1.6	3040	35000	
F 70 4_606.8	606.8	4.6	5000	2.7	2340	35000	2.3	5000	1.3	3070	35000	
F 70 4_657.4	657.4	4.3	5000	2.5	2340	35000	2.1	5000	1.2	3070	35000	
F 70 4_759.0	759.0	3.7	5000	2.1	2360	35000	1.8	5000	1.1	3090	35000	
F 70 4_822.2	822.2	3.4	5000	2.0	2360	35000	1.7	5000	1.0	3090	35000	
F 70 4_899.4	899.4	3.1	5000	1.8	2370	35000	1.6	5000	0.90	3110	35000	
F 70 4_974.4	974.4	2.9	5000	1.7	2370	35000	1.4	5000	0.83	3110	35000	
F 70 4_1091	1091	2.6	5000	1.5	2390	35000	1.3	5000	0.74	3120	35000	
F 70 4_1182	1182	2.4	5000	1.4	2390	35000	1.2	5000	0.69	3120	35000	
F 70 4_1368	1368	2.0	5000	1.2	2400	35000	1.0	5000	0.59	3130	35000	
F 70 4_1481	1481	1.9	5000	1.1	2400	35000	0.95	5000	0.55	3130	35000	
F 70 4_1585	1585	1.8	5000	1.0	2410	35000	0.88	5000	0.51	3140	35000	
F 70 4_1717	1717	1.6	5000	0.95	2410	35000	0.82	5000	0.47	3140	35000	
F 70 4_2019	2019	1.4	5000	0.80	2420	35000	0.69	5000	0.40	3150	35000	
F 70 4_2188	2188	1.3	5000	0.74	2420	35000	0.64	5000	0.37	3150	35000	

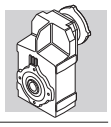

F 70 — 5000 Nm

	i	n_1 = 900 min^{-1}					n_1 = 500 min^{-1}					
		n_2 min^{-1}	M_{n2} Nm	P_{n1} kW	R_{n1} N	R_{n2} N	n_2 min^{-1}	M_{n2} Nm	P_{n1} kW	R_{n1} N	R_{n2} N	
F 70 3_10.0	10.0	90	3200	33	4870	21700	50	3200	18.1	7000	27000	445
F 70 3_10.9	10.9	83	3450	32	4970	21700	46	3450	17.9	7000	27200	
F 70 3_12.8	12.8	70	3850	31	2540	22500	39	3600	15.9	7000	28300	
F 70 3_13.9	13.9	65	4200	31	2380	22400	36	3900	15.8	7000	28300	
F 70 3_16.3	16.3	55	4000	25	3830	24500	31	4000	13.9	7000	30700	
F 70 3_17.7	17.7	51	4350	25	3750	24400	28.2	4350	13.9	7000	30800	
F 70 3_20.9	20.9	43	4000	19.5	5210	27000	23.9	4000	10.8	7000	33700	
F 70 3_22.6	22.6	40	4350	19.6	5130	26900	22.1	4350	10.9	7000	33800	
F 70 3_24.6	24.6	37	4000	16.5	5630	28700	20.3	4000	9.2	7000	35000	
F 70 3_27.7	27.7	32	5000	18.4	7000	28100	18.1	4650	9.5	7000	35000	
F 70 3_30.0	30.0	30	5000	16.9	7000	28800	16.7	5000	9.4	7000	35000	
F 70 3_35.4	35.4	25.4	5000	14.4	7000	31000	14.1	5000	8.0	7000	35000	
F 70 3_38.4	38.4	23.4	5000	13.2	7000	31700	13.0	5000	7.4	7000	35000	
F 70 3_45.2	45.2	19.9	5000	11.2	7000	34100	11.1	5000	6.2	7000	35000	
F 70 3_49.0	49.0	18.4	5000	10.4	7000	34900	10.2	5000	5.8	7000	35000	
F 70 3_57.7	57.7	15.6	5000	8.8	7000	35000	8.7	5000	4.9	7000	35000	
F 70 3_62.5	62.5	14.4	5000	8.1	7000	35000	8.0	5000	4.5	7000	35000	
F 70 3_67.9	67.9	13.3	5000	7.5	7000	35000	7.4	5000	4.2	7000	35000	
F 70 3_73.6	73.6	12.2	5000	6.9	7000	35000	6.8	5000	3.8	7000	35000	
F 70 3_85.4	85.4	10.5	5000	6.0	7000	35000	5.9	5000	3.3	7000	35000	
F 70 3_92.5	92.5	9.7	5000	5.5	7000	35000	5.4	5000	3.1	7000	35000	
F 70 3_101.2	101.2	8.9	5000	5.0	7000	35000	4.9	5000	2.8	7000	35000	
F 70 3_109.6	109.6	8.2	5000	4.6	7000	35000	4.6	5000	2.6	7000	35000	
F 70 3_122.7	122.7	7.3	5000	4.1	7000	35000	4.1	5000	2.3	7000	35000	
F 70 3_133.0	133.0	6.8	5000	3.8	7000	35000	3.8	5000	2.1	7000	35000	
F 70 3_153.8	153.8	5.9	5000	3.3	7000	35000	3.3	5000	1.8	7000	35000	
F 70 3_166.7	166.7	5.4	5000	3.0	7000	35000	3.0	5000	1.7	7000	35000	
F 70 3_180.9	180.9	5.0	5000	2.8	7000	35000	2.8	5000	1.6	7000	35000	
F 70 3_196.0	196.0	4.6	5000	2.6	7000	35000	2.6	5000	1.4	7000	35000	
F 70 4_216.5	216.5	4.2	5000	2.4	3430	35000	2.3	5000	1.3	3500	35000	
F 70 4_234.6	234.6	3.8	5000	2.2	3430	35000	2.1	5000	1.2	3500	35000	
F 70 4_280.9	280.9	3.2	5000	1.9	3500	35000	1.8	5000	1.0	3500	35000	
F 70 4_304.3	304.3	3.0	5000	1.7	3500	35000	1.6	5000	0.95	3500	35000	
F 70 4_372.5	372.5	2.4	5000	1.4	3500	35000	1.3	5000	0.78	3500	35000	
F 70 4_403.5	403.5	2.2	5000	1.3	3500	35000	1.2	5000	0.72	3500	35000	
F 70 4_471.2	471.2	1.9	5000	1.1	3500	35000	1.1	5000	0.62	3500	35000	
F 70 4_510.4	510.4	1.8	5000	1.0	3500	35000	0.98	5000	0.57	3500	35000	
F 70 4_606.8	606.8	1.5	5000	0.86	3500	35000	0.82	5000	0.48	3500	35000	
F 70 4_657.4	657.4	1.4	5000	0.79	3500	35000	0.76	5000	0.44	3500	35000	
F 70 4_759.0	759.0	1.2	5000	0.69	3500	35000	0.66	5000	0.38	3500	35000	
F 70 4_822.2	822.2	1.1	5000	0.63	3500	35000	0.61	5000	0.35	3500	35000	
F 70 4_899.4	899.4	1.0	5000	0.58	3500	35000	0.56	5000	0.32	3500	35000	
F 70 4_974.4	974.4	0.92	5000	0.54	3500	35000	0.51	5000	0.30	3500	35000	
F 70 4_1091	1091	0.82	5000	0.48	3500	35000	0.46	5000	0.27	3500	35000	
F 70 4_1182	1182	0.76	5000	0.44	3500	35000	0.42	5000	0.25	3500	35000	
F 70 4_1368	1368	0.66	5000	0.38	3500	35000	0.37	5000	0.21	3500	35000	
F 70 4_1481	1481	0.61	5000	0.35	3500	35000	0.34	5000	0.20	3500	35000	
F 70 4_1585	1585	0.57	5000	0.33	3500	35000	0.32	5000	0.18	3500	35000	
F 70 4_1717	1717	0.52	5000	0.30	3500	35000	0.29	5000	0.17	3500	35000	
F 70 4_2019	2019	0.45	5000	0.26	3500	35000	0.25	5000	0.14	3500	35000	
F 70 4_2188	2188	0.41	5000	0.24	3500	35000	0.23	5000	0.13	3500	35000	

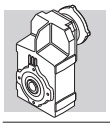

F 80 — 8000 Nm

	i	n_1 = 2800 min^{-1}					n_1 = 1400 min^{-1}					
		n_2 min^{-1}	M_{n2} Nm	P_{n1} kW	R_{n1} N	R_{n2} N	n_2 min^{-1}	M_{n2} Nm	P_{n1} kW	R_{n1} N	R_{n2} N	
F 80 3_10.3	10.3	272	3250	100	610	17200	136	4100	63	220	21800	
F 80 3_11.2	11.2	250	3520	99	620	17800	125	4440	63	230	21700	
F 80 3_12.9	12.9	217	3560	87	670	18900	109	4480	55	350	23100	
F 80 3_14.0	14.0	200	3850	87	700	18800	100	4860	55	310	23000	
F 80 3_16.2	16.2	173	3760	73	760	20300	86	4740	46	430	24800	
F 80 3_17.6	17.6	159	4000	72	730	20300	80	5140	46	410	24700	
F 80 3_20.3	20.3	138	4060	63	780	21700	69	5120	40	440	26500	
F 80 3_22.0	22.0	127	4400	63	780	21600	64	5540	40	470	26400	
F 80 3_25.2	25.2	111	4230	53	700	23300	56	5330	33	360	28500	
F 80 3_28.8	28.8	97	6550	72	4590	20500	49	8000	44	5890	25400	
F 80 3_31.3	31.3	89	7100	72	4590	20000	45	8000	40	6040	26000	
F 80 3_36.0	36.0	78	7250	64	4560	21500	39	8000	35	6110	28100	
F 80 3_39.0	39.0	72	6700	54	4890	23000	36	8000	32	6240	28800	
F 80 3_45.3	45.3	62	7900	55	4440	22700	31	8000	28	6240	31100	
F 80 3_49.1	49.1	57	8000	52	4750	23200	28.5	8000	26	6360	31900	
F 80 3_56.7	56.7	49	8000	45	4780	25200	24.7	8000	22	6390	34300	
F 80 3_61.5	61.5	46	8000	41	4890	25800	22.8	8000	21	6500	35100	
F 80 3_70.4	70.4	40	8000	36	4850	27800	19.9	8000	18.0	6460	37500	
F 80 3_76.3	76.3	37	8000	33	4950	28500	18.3	8000	16.6	6560	38400	
F 80 3_85.2	85.2	33	8000	30	4940	30300	16.4	8000	14.8	6550	40500	
F 80 3_92.3	92.3	30	8000	27	5040	31000	15.2	8000	13.7	6640	41500	
F 80 3_105.0	105.0	26.7	8000	24	5000	33200	13.3	8000	12.0	6610	44000	
F 80 3_113.8	113.8	24.6	8000	22	5090	34000	12.3	8000	11.1	6700	45000	
F 80 3_122.5	122.5	22.9	8000	21	5020	35400	11.4	8000	10.3	6630	45000	
F 80 3_132.7	132.7	21.1	8000	19.1	5110	36200	10.6	8000	9.5	6720	45000	
F 80 3_147.9	147.9	18.9	8000	17.1	5060	38200	9.5	8000	8.6	6660	45000	448
F 80 3_160.2	160.2	17.5	8000	15.8	5140	39100	8.7	8000	7.9	6750	45000	
F 80 3_184.6	184.6	15.2	8000	13.7	5090	41800	7.6	8000	6.9	6700	45000	
F 80 3_200.0	200.0	14.0	8000	12.7	5180	42800	7.0	8000	6.3	6780	45000	
F 80 4_218.5	218.5	12.8	8000	11.9	1020	45000	6.4	8000	5.9	2400	45000	
F 80 4_273.9	273.9	10.2	8000	9.5	1470	45000	5.1	8000	4.7	2680	45000	
F 80 4_296.7	296.7	9.4	8000	8.8	1470	45000	4.7	8000	4.4	2680	45000	
F 80 4_353.7	353.7	7.9	8000	7.3	1850	45000	4.0	8000	3.7	2770	45000	
F 80 4_383.2	383.2	7.3	8000	6.8	1850	45000	3.7	8000	3.4	2770	45000	
F 80 4_451.5	451.5	6.2	8000	5.8	2040	45000	3.1	8000	2.9	2820	45000	
F 80 4_489.1	489.1	5.7	8000	5.3	2040	45000	2.9	8000	2.7	2820	45000	
F 80 4_563.9	563.9	5.0	8000	4.6	2130	45000	2.5	8000	2.3	2860	45000	
F 80 4_610.9	610.9	4.6	8000	4.3	2130	45000	2.3	8000	2.1	2860	45000	
F 80 4_714.9	714.9	3.9	8000	3.6	2160	45000	2.0	8000	1.8	2890	45000	
F 80 4_774.4	774.4	3.6	8000	3.4	2160	45000	1.8	8000	1.7	2890	45000	
F 80 4_897.3	897.3	3.1	8000	2.9	2200	45000	1.6	8000	1.4	2930	45000	
F 80 4_972.0	972.0	2.9	8000	2.7	2200	45000	1.4	8000	1.3	2930	45000	
F 80 4_1058	1058	2.6	8000	2.5	2210	45000	1.3	8000	1.2	2950	45000	
F 80 4_1146	1146	2.4	8000	2.3	2210	45000	1.2	8000	1.1	2950	45000	
F 80 4_1277	1277	2.2	8000	2.0	2230	45000	1.1	8000	1.0	2960	45000	
F 80 4_1384	1384	2.0	8000	1.9	2230	45000	1.0	8000	0.94	2960	45000	
F 80 4_1578	1578	1.8	8000	1.6	2240	45000	0.89	8000	0.82	2970	45000	
F 80 4_1709	1709	1.6	8000	1.5	2240	45000	0.82	8000	0.76	2970	45000	
F 80 4_1834	1834	1.5	8000	1.4	2250	45000	0.76	8000	0.71	2980	45000	
F 80 4_1987	1987	1.4	8000	1.3	2250	45000	0.70	8000	0.65	2980	45000	

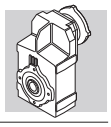

F 80 — 8000 Nm

	i	n_1 = 900 min^{-1}					n_1 = 500 min^{-1}					
		n_2 min^{-1}	M_{n2} Nm	P_{n1} kW	R_{n1} N	R_{n2} N	n_2 min^{-1}	M_{n2} Nm	P_{n1} kW	R_{n1} N	R_{n2} N	
F 80 3_10.3	10.3	87	4740	47	—	24700	49	5770	32	—	29300	
F 80 3_11.2	11.2	80	5140	47	—	24600	45	6250	32	—	29200	
F 80 3_12.9	12.9	70	5200	41	—	26200	39	6320	28	—	31100	
F 80 3_14.0	14.0	64	5620	41	—	26100	36	6800	27	—	31000	
F 80 3_16.2	16.2	56	5490	34	—	28200	31	6250	22	1540	34200	
F 80 3_17.6	17.6	51	5960	34	—	28100	28.4	6800	22	1410	30000	
F 80 3_20.3	20.3	44	5930	30	—	30100	24.6	6250	17.4	3710	37300	
F 80 3_22.0	22.0	41	6420	30	—	30000	22.7	6800	17.5	3590	37200	
F 80 3_25.2	25.2	36	6175	25	—	32400	19.8	6250	14.0	4660	40500	
F 80 3_28.8	28.8	31	8000	28	7000	31000	17.4	8000	15.7	7000	39600	
F 80 3_31.3	31.3	28.8	8000	26	7000	31700	16.0	8000	14.4	7000	40600	
F 80 3_36.0	36.0	25.0	8000	23	7000	34100	13.9	8000	12.6	7000	43300	
F 80 3_39.0	39.0	23.1	8000	21	7000	34900	12.8	8000	11.6	7000	44300	
F 80 3_45.3	45.3	19.9	8000	18.0	7000	37500	11.0	8000	10.0	7000	45000	
F 80 3_49.1	49.1	18.3	8000	16.6	7000	38400	10.2	8000	9.2	7000	45000	
F 80 3_56.7	56.7	15.9	8000	14.3	7000	41100	8.8	8000	8.0	7000	45000	
F 80 3_61.5	61.5	14.6	8000	13.2	7000	42000	8.1	8000	7.3	7000	45000	
F 80 3_70.4	70.4	12.8	8000	11.6	7000	44700	7.1	8000	6.4	7000	45000	
F 80 3_76.3	76.3	11.8	8000	10.7	7000	45000	6.6	8000	5.9	7000	45000	
F 80 3_85.2	85.2	10.6	8000	9.5	7000	45000	5.9	8000	5.3	7000	45000	
F 80 3_92.3	92.3	9.8	8000	8.8	7000	45000	5.4	8000	4.9	7000	45000	
F 80 3_105.0	105.0	8.6	8000	7.7	7000	45000	4.8	8000	4.3	7000	45000	
F 80 3_113.8	113.8	7.9	8000	7.1	7000	45000	4.4	8000	4.0	7000	45000	
F 80 3_122.5	122.5	7.3	8000	6.6	7000	45000	4.1	8000	3.7	7000	45000	
F 80 3_132.7	132.7	6.8	8000	6.1	7000	45000	3.8	8000	3.4	7000	45000	
F 80 3_147.9	147.9	6.1	8000	5.5	7000	45000	3.4	8000	3.1	7000	45000	448
F 80 3_160.2	160.2	5.6	8000	5.1	7000	45000	3.1	8000	2.8	7000	45000	
F 80 3_184.6	184.6	4.9	8000	4.4	7000	45000	2.7	8000	2.4	7000	45000	
F 80 3_200.0	200.0	4.5	8000	4.1	7000	45000	2.5	8000	2.3	7000	45000	
F 80 4_218.5	218.5	4.1	8000	3.8	3130	45000	2.3	8000	2.1	3500	45000	
F 80 4_273.9	273.9	3.3	8000	3.0	3240	45000	1.8	8000	1.7	3500	45000	
F 80 4_296.7	296.7	3.0	8000	2.8	3240	45000	1.7	8000	1.6	3500	45000	
F 80 4_353.7	353.7	2.5	8000	2.4	3330	45000	1.4	8000	1.3	3500	45000	
F 80 4_383.2	383.2	2.3	8000	2.2	3330	45000	1.3	8000	1.2	3500	45000	
F 80 4_451.5	451.5	2.0	8000	1.8	3380	45000	1.1	8000	1.0	3500	45000	
F 80 4_489.1	489.1	1.8	8000	1.7	3380	45000	1.0	8000	0.95	3500	45000	
F 80 4_563.9	563.9	1.6	8000	1.5	3420	45000	0.89	8000	0.82	3500	45000	
F 80 4_610.9	610.9	1.5	8000	1.4	3420	45000	0.82	8000	0.76	3500	45000	
F 80 4_714.9	714.9	1.3	8000	1.2	3460	45000	0.70	8000	0.65	3500	45000	
F 80 4_774.4	774.4	1.2	8000	1.1	3460	45000	0.65	8000	0.60	3500	45000	
F 80 4_897.3	897.3	1.0	8000	0.93	3490	45000	0.56	8000	0.52	3500	45000	
F 80 4_972.0	972.0	0.93	8000	0.86	3490	45000	0.51	8000	0.48	3500	45000	
F 80 4_1058	1058	0.85	8000	0.79	3500	45000	0.47	8000	0.44	3500	45000	
F 80 4_1146	1146	0.79	8000	0.73	3500	45000	0.44	8000	0.40	3500	45000	
F 80 4_1277	1277	0.70	8000	0.65	3500	45000	0.39	8000	0.36	3500	45000	
F 80 4_1384	1384	0.65	8000	0.60	3500	45000	0.36	8000	0.34	3500	45000	
F 80 4_1578	1578	0.57	8000	0.53	3500	45000	0.32	8000	0.29	3500	45000	
F 80 4_1709	1709	0.53	8000	0.49	3500	45000	0.29	8000	0.27	3500	45000	
F 80 4_1834	1834	0.49	8000	0.46	3500	45000	0.27	8000	0.25	3500	45000	
F 80 4_1987	1987	0.45	8000	0.42	3500	45000	0.25	8000	0.23	3500	45000	

(—) Contact our technical service department advising radial load data (rotation direction, orientation, position)

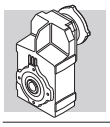

F 90 — 14000 Nm

	i	n_1 = 2800 min^{-1}					n_1 = 1400 min^{-1}					
		n_2 min^{-1}	M_{n2} Nm	P_{n1} kW	R_{n1} N	R_{n2} N	n_2 min^{-1}	M_{n2} Nm	P_{n1} kW	R_{n1} N	R_{n2} N	
F 90 3_10.3	10.3	272	6500	200	5480	23800	136	8000	123	8000	29300	451
F 90 3_11.1	11.1	252	7150	204	5280	23300	126	8800	125	7770	28700	
F 90 3_13.4	13.4	209	7550	178	4880	25000	104	9300	110	7280	30700	
F 90 3_14.5	14.5	193	8100	177	5000	24700	97	10000	109	7400	30300	
F 90 3_16.5	16.5	170	8400	161	4540	26000	85	10300	99	6960	32000	
F 90 3_17.9	17.9	156	8950	158	4560	25700	78	11000	97	7180	31700	
F 90 3_20.6	20.6	136	9200	141	3980	27400	68	11300	87	6260	33700	
F 90 3_22.3	22.3	126	9750	138	4280	27100	63	12000	85	6590	33400	
F 90 3_25.4	25.4	110	10050	125	3620	28700	55	12000	75	6310	36000	
F 90 3_28.6	28.6	98	9750	108	9800	30900	49	12000	66	12400	38000	
F 90 3_31.0	31.0	90	10550	108	9800	30300	45	13000	66	12400	37300	
F 90 3_37.4	37.4	75	10950	93	9820	32800	37	13500	57	12400	40400	
F 90 3_40.5	40.5	69	11900	93	9820	32100	35	14000	55	12500	40600	
F 90 3_46.1	46.1	61	12050	83	9840	34300	30	14000	48	12600	43600	
F 90 3_49.9	49.9	56	13050	83	9840	33500	28.1	14000	44	12700	44700	
F 90 3_57.3	57.3	49	13050	72	9810	36300	24.4	14000	39	12700	48100	
F 90 3_62.1	62.1	45	14000	71	9830	35600	22.5	14000	36	12800	49300	
F 90 3_70.8	70.8	40	14000	63	9830	38500	19.8	14000	31	12800	52700	
F 90 3_76.7	76.7	37	14000	58	9960	39500	18.3	14000	29	13000	54000	
F 90 3_88.4	88.4	32	14000	50	9930	42800	15.8	14000	25	12900	55000	
F 90 3_95.8	95.8	29.2	14000	46	10100	43800	14.6	14000	23	13100	55000	
F 90 3_103.3	103.3	27.1	14000	43	9960	45900	13.6	14000	21	13000	55000	
F 90 3_111.9	111.9	25.0	14000	40	10100	47100	12.5	14000	19.8	13100	55000	
F 90 3_126.8	126.8	22.1	14000	35	10000	50300	11.0	14000	17.5	13000	55000	
F 90 3_137.3	137.3	20.4	14000	32	10100	51500	10.2	14000	16.1	13100	55000	
F 90 3_150.3	150.3	18.6	14000	29	10100	54000	9.3	14000	14.7	13100	55000	
F 90 3_162.8	162.8	17.2	14000	27	10200	55000	8.6	14000	13.6	13200	55000	
F 90 3_179.2	179.2	15.6	14000	25	10200	55000	7.8	14000	12.4	13100	55000	
F 90 3_194.2	194.2	14.4	14000	23	10200	55000	7.2	14000	11.4	13200	55000	
F 90 4_213.6	213.6	13.1	14000	21	—	55000	6.6	14000	10.6	—	55000	
F 90 4_231.4	231.4	12.1	14000	19.6	—	55000	6.1	14000	9.8	—	55000	
F 90 4_268.7	268.7	10.4	14000	16.9	—	55000	5.2	14000	8.5	420	55000	
F 90 4_291.1	291.1	9.6	14000	15.6	—	55000	4.8	14000	7.8	420	55000	
F 90 4_361.8	361.8	7.7	14000	12.6	—	55000	3.9	14000	6.3	990	55000	
F 90 4_392.0	392.0	7.1	14000	11.6	—	55000	3.6	14000	5.8	990	55000	
F 90 4_457.5	457.5	6.1	14000	9.9	—	55000	3.1	14000	5.0	1390	55000	
F 90 4_495.6	495.6	5.6	14000	9.2	—	55000	2.8	14000	4.6	1390	55000	
F 90 4_577.5	577.5	4.8	14000	7.9	—	55000	2.4	14000	3.9	1600	55000	
F 90 4_625.6	625.6	4.5	14000	7.3	—	55000	2.2	14000	3.6	1600	55000	
F 90 4_714.0	714.0	3.9	14000	6.4	—	55000	2.0	14000	3.2	1800	55000	
F 90 4_773.4	773.4	3.6	14000	5.9	—	55000	1.8	14000	2.9	1800	55000	
F 90 4_910.2	910.2	3.1	14000	5.0	—	55000	1.5	14000	2.5	2020	55000	
F 90 4_986.0	986.0	2.8	14000	4.6	—	55000	1.4	14000	2.3	2020	55000	
F 90 4_1112	1112	2.5	14000	4.1	—	55000	1.3	14000	2.0	2110	55000	
F 90 4_1205	1205	2.3	14000	3.8	—	55000	1.2	14000	1.9	2110	55000	
F 90 4_1318	1318	2.1	14000	3.4	—	55000	1.1	14000	1.7	2220	55000	
F 90 4_1428	1428	2.0	14000	3.2	—	55000	0.98	14000	1.6	2220	55000	
F 90 4_1571	1571	1.8	14000	2.9	—	55000	0.89	14000	1.4	2260	55000	
F 90 4_1702	1702	1.6	14000	2.7	—	55000	0.82	14000	1.3	2260	55000	
F 90 4_1937	1937	1.4	14000	2.3	—	55000	0.72	14000	1.2	2300	55000	
F 90 4_2099	2099	1.3	14000	2.2	—	55000	0.67	14000	1.1	2300	55000	

(—) Contact our technical service department advising radial load data (rotation direction, orientation, position)

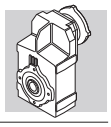

F 90 — 14000 Nm

	i	n_1 = 900 min^{-1}					n_1 = 500 min^{-1}					
		n_2 min^{-1}	M_{n2} Nm	P_{n1} kW	R_{n1} N	R_{n2} N	n_2 min^{-1}	M_{n2} Nm	P_{n1} kW	R_{n1} N	R_{n2} N	
F 90 3_10.3	10.3	87	9150	90	10000	33400	49	9600	53	15000	41900	451
F 90 3_11.1	11.1	81	10050	92	9780	32700	45	10400	53	15000	41600	
F 90 3_13.4	13.4	67	10600	80	9270	35100	37	12500	53	12700	42100	
F 90 3_14.5	14.5	62	11400	80	9390	34600	34	13550	53	12700	41400	
F 90 3_16.5	16.5	55	11750	72	8890	36600	30	12300	42	14600	46400	
F 90 3_17.9	17.9	50	12550	71	9140	36200	27.9	13150	41	14800	46200	
F 90 3_20.6	20.6	44	12200	60	9100	39700	24.3	12200	33	15000	51000	
F 90 3_22.3	22.3	40	13200	60	9120	39000	22.4	13200	33	15000	50700	
F 90 3_25.4	25.4	35	12000	48	10400	43800	19.7	12000	27	15000	55000	
F 90 3_28.6	28.6	31	13700	49	14400	43400	17.5	14000	28	15000	55000	
F 90 3_31.0	31.0	29.0	14000	46	14500	44000	16.1	14000	26	15000	55000	
F 90 3_37.4	37.4	24.1	14000	38	14700	48400	13.4	14000	21	15000	55000	
F 90 3_40.5	40.5	22.2	14000	35	14800	49600	12.3	14000	19.5	15000	55000	
F 90 3_46.1	46.1	19.5	14000	31	14900	53000	10.8	14000	17.2	15000	55000	
F 90 3_49.9	49.9	18.0	14000	29	15000	54200	10.0	14000	15.8	15000	55000	
F 90 3_57.3	57.3	15.7	14000	25	15000	55000	8.7	14000	13.8	15000	55000	
F 90 3_62.1	62.1	14.5	14000	23	15000	55000	8.1	14000	12.7	15000	55000	
F 90 3_70.8	70.8	12.7	14000	20	15000	55000	7.1	14000	11.2	15000	55000	
F 90 3_76.7	76.7	11.7	14000	18.6	15000	55000	6.5	14000	10.3	15000	55000	
F 90 3_88.4	88.4	10.2	14000	16.1	15000	55000	5.7	14000	8.9	15000	55000	
F 90 3_95.8	95.8	9.4	14000	14.9	15000	55000	5.2	14000	8.3	15000	55000	
F 90 3_103.3	103.3	8.7	14000	13.8	15000	55000	4.8	14000	7.7	15000	55000	
F 90 3_111.9	111.9	8.0	14000	12.7	15000	55000	4.5	14000	7.1	15000	55000	
F 90 3_126.8	126.8	7.1	14000	11.2	15000	55000	3.9	14000	6.2	15000	55000	
F 90 3_137.3	137.3	6.6	14000	10.4	15000	55000	3.6	14000	5.8	15000	55000	
F 90 3_150.3	150.3	6.0	14000	9.5	15000	55000	3.3	14000	5.3	15000	55000	
F 90 3_162.8	162.8	5.5	14000	8.7	15000	55000	3.1	14000	4.9	15000	55000	
F 90 3_179.2	179.2	5.0	14000	7.9	15000	55000	2.8	14000	4.4	15000	55000	
F 90 3_194.2	194.2	4.6	14000	7.3	15000	55000	2.6	14000	4.1	15000	55000	
F 90 4_213.6	213.6	4.2	14000	6.8	810	55000	2.3	14000	3.8	2350	55000	
F 90 4_231.4	231.4	3.9	14000	6.3	810	55000	2.2	14000	3.5	2350	55000	
F 90 4_268.7	268.7	3.3	14000	5.4	1390	55000	1.9	14000	3.0	2920	55000	
F 90 4_291.1	291.1	3.1	14000	5.0	1390	55000	1.7	14000	2.8	2920	55000	
F 90 4_361.8	361.8	2.5	14000	4.0	1960	55000	1.4	14000	2.2	3390	55000	
F 90 4_392.0	392.0	2.3	14000	3.7	1960	55000	1.3	14000	2.1	3390	55000	
F 90 4_457.5	457.5	2.0	14000	3.2	2360	55000	1.1	14000	1.8	3490	55000	
F 90 4_495.6	495.6	1.8	14000	2.9	2360	55000	1.0	14000	1.6	3490	55000	
F 90 4_577.5	577.5	1.6	14000	2.5	2570	55000	0.87	14000	1.4	3500	55000	
F 90 4_625.6	625.6	1.4	14000	2.3	2570	55000	0.80	14000	1.3	3500	55000	
F 90 4_714.0	714.0	1.3	14000	2.0	2770	55000	0.70	14000	1.1	3500	55000	
F 90 4_773.4	773.4	1.2	14000	1.9	2770	55000	0.65	14000	1.0	3500	55000	
F 90 4_910.2	910.2	0.99	14000	1.6	2840	55000	0.55	14000	0.89	3500	55000	
F 90 4_986.0	986.0	0.91	14000	1.5	2840	55000	0.51	14000	0.82	3500	55000	
F 90 4_1112	1112	0.81	14000	1.3	2860	55000	0.45	14000	0.73	3500	55000	
F 90 4_1205	1205	0.75	14000	1.2	2860	55000	0.41	14000	0.67	3500	55000	
F 90 4_1318	1318	0.68	14000	1.1	2890	55000	0.38	14000	0.62	3500	55000	
F 90 4_1428	1428	0.63	14000	1.0	2890	55000	0.35	14000	0.57	3500	55000	
F 90 4_1571	1571	0.57	14000	0.93	2900	55000	0.32	14000	0.52	3500	55000	
F 90 4_1702	1702	0.53	14000	0.86	2900	55000	0.29	14000	0.48	3500	55000	
F 90 4_1937	1937	0.46	14000	0.75	2910	55000	0.26	14000	0.42	3500	55000	
F 90 4_2099	2099	0.43	14000	0.70	2910	55000	0.24	14000	0.39	3500	55000	

61 MOTOR AVAILABILITY

Please be aware that motor-gearbox combinations resulting from the following charts are purely based on geometrical compatibility.

When selecting a gearmotor, refer to procedure specified at paragraph 12 and observe particularly the condition $S \geq f_s$.

(D 56)

		IEC_ BN (IM B5)											
		BN										IEC	
P_{n1}(#) [kW]	2p	0.37	0.75	1.5	2.2	4	4	9.2	18.5	22	30	45	55
	4p	0.25	0.55	1.1	1.85	3	4	9.2	15	22	30	47	55
	6p	0.12	0.37	0.75	1.1	1.85	2.2	5.5	11	15	18.5	30	37
		P63	P71	P80	P90	P100	P112	P132	P160	P180	P200	P225	P250
F 10 2	i =	7.4_127.1		7.4_91.5		7.4_91.5							
F 20 2	i =	8.7_132.2 ⛔ (14.8_18.1)		6.4_114.3		6.4_114.3							
F 20 3	i =	156.3_545.3		156.3_545.3		156.3_545.3							
F 25 2	i =	9.4_44.4 ⛔ (10.6_13.0)		6.9_44.4		6.9_44.4							
F 25 3	i =	50.8_333.1		45.6_288.1		45.6_288.1							
F 25 4	i =	393.9_1374		393.9_1374		393.9_1374							
F 31 2	i =	18.5_44.6		6.9_44.6		6.9_44.6		6.9_37.7					
F 31 3	i =	69.1_374.4		47.5_374.4		47.5_374.4		47.5_140.7					
F 31 4	i =	418.9_1539		418.9_1539		418.9_1539							
F 41 2	i =	24.1_47.9		6.7_47.9		6.7_47.9		6.7_47.9					
F 41 3	i =	84.9_344.8		51.5_344.8		51.5_344.8		51.5_168.7					
F 41 4	i =	433.7_1411		433.7_1411		433.7_1411							
F 51 2	i =	30.0_37.1		7.2_37.1		7.2_37.1		7.2_37.1	7.2_37.1	7.2_37.1			
F 51 3	i =	105.1_352.5		48.9_352.5		48.9_352.5		48.9_202.4	48.9_202.4	48.9_202.4			
F 51 4	i =	429.1_1439		429.1_1439		429.1_1439							
F 60 3	i =	98.2_280.7		11.8_280.7 ⛔ (29.6_32.1)		11.8_280.7 ⛔ (29.6_32.1)		9.0_201.4	9.0_201.4	9.0_201.4			
F 60 4	i =	315.4_1141		315.4_1141		315.4_1141							
F 70 3	i =			85.4_196.0		85.4_196.0		16.3_196.0 ⛔ (27.7_38.4)	10.0_196.0	10.0_196.0	10.0_49.0 ⛔ (20.9_24.6)		
F 70 4	i =	372.5_2188		216.5_2188		216.5_2188		216.5_822.2					
F 80 3	i =			105.0_200.0		105.0_200.0		20.3_200.0 ⛔ (28.8_49.1)	12.9_200.0 ⛔ (28.8_31.3)	10.3_200.0	10.3_132.7	10.3_132.7	
F 80 4	i =	451.5_1987		218.5_1987		218.5_1987		218.5_972.0					
F 90 3	i =			126.8_194.2		126.8_194.2		25.4_194.2 ⛔ (28.6_62.1)	20.6_194.2 ⛔ (28.6_49.9)	10.3_194.2	10.3_162.8	10.3_162.8	10.3_162.8
F 90 4	i =	577.5_2099		213.6_2099		213.6_2099		213.6_1205	213.6_1205	213.6_1205			

(#) P_{n1} = maximum installable power on input P_

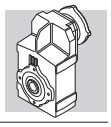

(D 57)

		M05	M1	M2	M3	M4	M5
F 10 2		7.4_127.1	7.4_71.1	7.4_91.5	7.4_91.5		
F 20 2		8.7_132.2 ⛔ (14.8_18.1)	8.7_90.4 ⛔ (14.8_18.1)	6.4_114.3	6.4_114.3		
F 20 3		156.3_545.3	156.3_545.3	156.3_545.3	156.3_545.3		
F 25 2		9.4_44.4 ⛔ (10.6_13.0)	9.4_44.4 ⛔ (10.6_13.0)	6.9_44.4	6.9_44.4		
F 25 3		50.8_333.1	50.8_227.8	45.6_288.1	45.6_288.1		
F 25 4		393.9_1374	393.9_1374	393.9_1374	393.9_1374		
F 31 2			18.5_44.6	6.9_44.6	6.9_44.6	6.9_37.7	
F 31 3			69.1_293.8	47.5_374.4	47.5_374.4	47.5_140.7	
F 31 4		418.9_1539	418.9_1539	418.9_1539	418.9_1539		
F 41 2			24.1_47.9	6.7_47.9	6.7_47.9	6.7_47.9	
F 41 3			84.9_344.8	51.5_344.8	51.5_344.8	51.5_168.7	
F 41 4	**i =**	433.7_1411	433.7_1411	433.7_1411	433.7_1411		
F 51 2			30.0_37.1	7.2_37.1	7.2_37.1	7.2_37.1	7.2_37.1
F 51 3			105.1_352.5	48.9_352.5	48.9_352.5	48.9_202.4	48.9_202.4
F 51 4			429.1_1439	429.1_1439	429.1_1439		
F 60 3				11.8_280.7 ⛔ (29.6_32.1)	11.8_280.7 ⛔ (29.6_32.1)	9_201.4	9_201.4
F 60 4			315.4_1141	315.4_1141	315.4_1141		
F 70 3				85.4_196.0	85.4_196.0	16.3_196.0 ⛔ (27.7_38.4)	16.3_196.0 ⛔ (27.7_38.4)
F 70 4			372.5_2188	216.5_2188	216.5_2188	216.5_822.2	
F 80 3					105.0_200.0	20.3_200.0 ⛔ (28.8_49.1)	20.3_200.0 ⛔ (28.8_49.1)
F 80 4			451.5_1987	218.5_1987	218.5_1987	218.5_972.0	
F 90 3					126.8_194.2	25.4_194.2 ⛔ (28.6_62.1)	25.4_194.2 ⛔ (28.6_62.1)
F 90 4				213.6_2099	213.6_2099	213.6_1205	

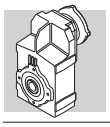

Motor adapters matching the most popular brands of servomotors are available for units size F 10 … F 60. Dimensions of servomotor inputs are provided within the drawing section for each frame size.
The code **SK** applies for inputs featuring a conventional keyway, while through the specification of the **SC** code the input shaft will feature a clamping device instead.

(D 58)

		SERVO INPUT							
		SK60A	SK60B	SK80A	SK80B	SK80C	SK95A	SK95B	SK95C
		SC60A	SC60B	SC80A	SC80B	SC80C	SC95A	SC95B	SC95C
F 10 2	i =	7.4_127.1	7.4_71.1	7.4_71.1		7.4_91.5	7.4_71.1	7.4_91.5	7.4_91.5
F 20 2		8.7_132.2 ⛔ (14.8_18.1)	8.7_90.4 ⛔ (14.8_18.1)	8.7_90.4 ⛔ (14.8_18.1)		6.4_114.3	8.7_90.4 ⛔ (14.8_18.1)	6.4_114.3	6.4_114.3
F 20 3		156.3_545.3	156.3_545.3	156.3_545.3		156.3_545.3	156.3_545.3	156.3_545.3	156.3_545.3
F 25 2		9.4_44.4 ⛔ (10.6_13.0)	9.4_44.4 ⛔ (10.6_13.0)	9.4_44.4 ⛔ (10.6_13.0)		6.9_44.4	9.4_44.4 ⛔ (10.6_13.0)	6.9_44.4	6.9_44.4
F 25 3		45.6_333.1	45.6_227.8	45.6_227.8		45.6_288.1	45.6_227.8	45.6_288.1	45.6_288.1
F 25 4		393.9_1374	393.9_1374	393.9_1374		393.9_1374	393.9_1374	393.9_1374	393.9_1374
F 31 2		18.5_44.6	18.5_44.6	18.5_44.6		6.9_44.6	18.5_44.6	6.9_44.6	6.9_44.6
F 31 3		69.1_374.4	69.1_293.8	69.1_293.8		47.5_374.4	69.1_293.8	47.5_374.4	47.5_374.4
F 31 4		418.9_1539	418.9_1539	418.9_1539		418.9_1539	418.9_1539	418.9_1539	418.9_1539
F 41 2					24.1_47.9	6.7_47.9	24.1_47.9	6.7_47.9	6.7_47.9
F 41 3					84.9_344.8	51.5_344.8	84.9_344.8	51.5_344.8	51.5_344.8
F 41 4		433.7_1411	433.7_1411	433.7_1411		433.7_1411	433.7_1411	433.7_1411	433.7_1411
F 51 2					30.0_37.1	7.2_37.1	30.0_37.1	7.2_37.1	7.2_37.1
F 51 3					105.1_352.5	48.9_352.5	105.1_352.5	48.9_352.5	48.9_352.5
F 51 4						429.1_1439	429.1_1439	429.1_1439	429.1_1439
F 60 3						11.8_280.7 ⛔ (29.6_32.1)	106.4_280.7	11.8_280.7 ⛔ (29.6_32.1)	11.8_280.7 ⛔ (29.6_32.1)
F 60 4					315.4_1141	315.4_1141	315.4_1141	315.4_1141	315.4_1141

(D 59)

		SERVO INPUT					
		SK110A	SK110B	SK130A	SK130B	SK180A	SK180B
		SC110A	SC110B	SC130A	SC130B	SC180A	SC180B
F 10 2	i =	7.4_91.5	7.4_91.5				
F 20 2		6.4_114.3	6.4_114.3				
F 20 3		156.3_545.3	156.3_545.3				
F 25 2		6.9_44.4	6.9_44.4				
F 25 3		45.6_288.1	45.6_288.1				
F 25 4		393.9_1374	393.9_1374				
F 31 2		6.9_44.6	6.9_44.6	6.9_44.6			
F 31 3		47.5_374.4	47.5_374.4	47.5_374.4			
F 31 4		418.9_1539	418.9_1539				
F 41 2		6.7_47.9	6.7_47.9	6.7_47.9	6.7_47.9	6.7_47.9	6.7_47.9
F 41 3		51.5_344.8	51.5_344.8	51.5_344.8	51.5_168.7	51.5_168.7	51.5_168.7
F 41 4		433.7_1411	433.7_1411				
F 51 2		7.2_37.1	7.2_37.1	7.2_37.1	7.2_37.1	7.2_37.1	7.2_37.1
F 51 3		48.9_352.5	48.9_352.5	48.9_352.5	48.9_202.4	48.9_202.4	48.9_202.4
F 51 4		429.1_1439	429.1_1439	429.1_1439			
F 60 3		11.8_280.7 ⛔ (29.6_32.1)	11.8_280.7 ⛔ (29.6_32.1)	11.8_280.7 ⛔ (29.6_32.1)	9.0_201.4	9.0_201.4	9.0_201.4
F 60 4		315.4_1141	315.4_1141	315.4_1141			

62 MOMENT OF INERTIA

The following charts indicate moment of inertia values Jr [kgm²] referred to the gear unit high speed shaft. A key to the symbols used follows:

Values under this icon refer to compact gear units, without motor. To obtain the overall moment of inertia for the gearmotor just add the value of the inertia for the specific compact motor, given in the relevant rating chart.

IEC — Values under this symbol refer to gearboxes with IEC motor adaptor (IEC size...).

This symbol refers to gearbox values.

SERVO — Values under this symbol refer to gear unit with servomotor input adapter.

F 10

	i	J (•10-4) [kgm2]							
			IEC						
			63	71	80	90	100	112	
F 10 2_7.4	7.4	1.0	1.8	1.8	3.8	3.7	4.9	4.9	1.7
F 10 2_8.6	8.6	0.77	1.5	1.5	3.6	3.5	4.7	4.7	1.5
F 10 2_9.8	9.8	0.64	1.4	1.4	3.4	3.3	4.5	4.5	1.3
F 10 2_11.5	11.5	0.48	1.2	1.2	3.3	3.2	4.4	4.4	1.2
F 10 2_13.0	13.0	0.38	1.1	1.1	3.2	3.1	4.3	4.3	1.1
F 10 2_14.6	14.6	0.61	1.4	1.4	3.4	3.3	4.5	4.5	1.3
F 10 2_17.0	17.0	0.48	1.3	1.2	3.3	3.2	4.4	4.4	1.2
F 10 2_19.3	19.3	0.41	1.2	1.2	3.2	3.1	4.3	4.3	1.1
F 10 2_22.8	22.8	0.32	1.1	1.1	3.1	3.0	4.2	4.2	1.0
F 10 2_25.8	25.8	0.25	1.0	1.0	3.1	2.9	4.1	4.1	0.93
F 10 2_29.6	29.6	0.19	1.0	0.95	3.0	2.9	4.1	4.1	0.87
F 10 2_33.0	33.0	0.16	0.93	0.92	3.0	2.8	4.1	4.1	0.84
F 10 2_35.3	35.3	0.14	0.92	0.90	3.0	2.8	4.0	4.0	0.83
F 10 2_39.6	39.6	0.12	0.90	0.88	2.9	2.8	4.0	4.0	0.80
F 10 2_44.7	44.7	0.10	0.88	0.86	2.9	2.8	4.0	4.0	0.79
F 10 2_48.7	48.7	0.09	0.86	0.85	2.9	2.8	4.0	4.0	0.77
F 10 2_56.7	56.7	0.07	0.84	0.83	2.9	2.7	4.0	4.0	0.75
F 10 2_63.0	63.0	0.06	0.83	0.82	2.9	2.7	3.9	3.9	0.74
F 10 2_71.1	71.1	0.05	0.82	0.81	2.8	2.7	3.9	3.9	0.73
F 10 2_81.3	81.3	0.04	0.78	0.77	2.8	2.7	3.9	3.9	0.67
F 10 2_91.5	91.5	0.03	0.78	0.76	2.8	2.7	3.9	3.9	0.66
F 10 2_106.0	106.0	0.03	0.77	0.76	—	—	—	—	0.66
F 10 2_127.1	127.1	0.02	0.76	0.75	—	—	—	—	0.65

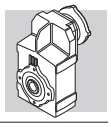

F 10

	i	J (•10-4) [kgm2]									
		SERVO									
		60A		60B 80A		95A		80C 95B 110A		95C 110B	
		SK	SC	SK	SC	SK	SC	SK	SC	SK	SC
F 10 2_7.4	7.4	1.3	1.5	1.3	1.7	3.8	4.3	3.8	4.3	3.7	4.7
F 10 2_8.6	8.6	1.0	1.3	1.1	1.5	3.6	4.0	3.6	4.1	3.5	4.5
F 10 2_9.8	9.8	0.91	1.2	0.93	1.4	3.5	3.9	3.4	3.9	3.3	4.3
F 10 2_11.5	11.5	0.75	1.0	0.77	1.2	3.3	3.7	3.3	3.8	3.2	4.2
F 10 2_13.0	13.0	0.65	0.91	0.67	1.1	3.2	3.6	3.2	3.7	3.1	4.1
F 10 2_14.6	14.6	0.88	1.1	0.91	1.3	3.4	3.9	3.4	3.9	3.3	4.3
F 10 2_17.0	17.0	0.75	1.0	0.77	1.2	3.3	3.7	3.3	3.8	3.2	4.2
F 10 2_19.3	19.3	0.68	0.94	0.70	1.1	3.2	3.7	3.2	3.7	3.1	4.1
F 10 2_22.8	22.8	0.59	0.85	0.61	1.0	3.1	3.6	3.1	3.6	3.0	4.0
F 10 2_25.8	25.8	0.52	0.78	0.54	0.98	3.1	3.5	3.1	3.6	2.9	3.9
F 10 2_29.6	29.6	0.46	0.72	0.48	0.92	3.0	3.4	3.0	3.5	2.9	3.9
F 10 2_33.0	33.0	0.43	0.69	0.45	0.89	3.0	3.4	3.0	3.5	2.8	3.8
F 10 2_35.3	35.3	0.41	0.67	0.43	0.87	3.0	3.4	3.0	3.5	2.8	3.8
F 10 2_39.6	39.6	0.39	0.65	0.41	0.85	2.9	3.3	2.9	3.4	2.8	3.8
F 10 2_44.7	44.7	0.37	0.63	0.39	0.83	2.9	3.4	2.9	3.4	2.8	3.8
F 10 2_48.7	48.7	0.36	0.62	0.38	0.82	2.9	3.3	2.9	3.4	2.8	3.8
F 10 2_56.7	56.7	0.34	0.60	0.36	0.80	2.9	3.3	2.9	3.4	2.7	3.7
F 10 2_63.0	63.0	0.33	0.59	0.35	0.79	2.9	3.3	2.9	3.4	2.7	3.7
F 10 2_71.1	71.1	0.32	0.58	0.34	0.78	2.9	3.3	2.8	3.3	2.7	3.7
F 10 2_81.3	81.3	0.31	0.57	—	—	—	—	2.8	3.3	2.7	3.7
F 10 2_91.5	91.5	0.30	0.56	—	—	—	—	2.8	3.3	2.7	3.7
F 10 2_106.0	106.0	0.30	0.56	—	—	—	—	—	—	—	—
F 10 2_127.1	127.1	0.29	0.55	—	—	—	—	—	—	—	—

F 20

	i	J (•10-4) [kgm2]							
			IEC						
			63	71	80	90	100	112	
F 20 2_6.4	6.4	2.2	—	—	5.0	4.8	6.0	6.0	3.9
F 20 2_7.8	7.8	1.5	—	—	4.3	4.2	5.4	5.4	3.3
F 20 2_8.7	8.7	1.3	2.0	2.0	4.1	3.9	5.2	5.2	3.0
F 20 2_10.0	10.0	1.0	1.8	1.7	3.8	3.7	4.9	4.9	2.7
F 20 2_11.2	11.2	0.88	1.6	1.6	3.6	3.5	4.7	4.7	2.6
F 20 2_14.8	14.8	1.2	—	—	4.0	3.9	5.1	5.1	2.9
F 20 2_18.1	18.1	0.90	—	—	3.7	3.5	4.7	4.7	2.6
F 20 2_20.2	20.2	0.78	1.5	1.5	3.5	3.4	4.6	4.6	2.5
F 20 2_23.1	23.1	0.64	1.4	1.3	3.4	3.3	4.5	4.5	2.4
F 20 2_25.9	25.9	0.57	1.3	1.3	3.3	3.2	4.4	4.4	2.3
F 20 2_30.4	30.4	0.41	1.1	1.1	3.2	3.0	4.3	4.3	2.1
F 20 2_33.1	33.1	0.36	1.1	1.1	3.1	3.0	4.2	4.2	2.1
F 20 2_37.9	37.9	0.30	1.0	1.0	3.1	2.9	4.1	4.1	2.0
F 20 2_41.8	41.8	0.27	1.0	1.0	3.0	2.9	4.1	4.1	2.0
F 20 2_44.8	44.8	0.24	1.0	1.0	3.0	2.9	4.1	4.1	2.0
F 20 2_50.7	50.7	0.21	0.93	0.92	3.0	2.8	4.1	4.1	1.9
F 20 2_56.7	56.7	0.18	0.91	0.90	2.9	2.8	4.0	4.0	1.9
F 20 2_61.9	61.9	0.16	0.89	0.88	2.9	2.8	4.0	4.0	1.9
F 20 2_69.1	69.1	0.14	0.87	0.86	2.9	2.8	4.0	4.0	1.8
F 20 2_76.8	76.8	0.12	0.86	0.85	2.9	2.8	4.0	4.0	1.8
F 20 2_90.4	90.4	0.10	0.84	0.82	2.9	2.7	3.9	3.9	1.8
F 20 2_101.6	101.6	0.09	0.80	0.79	2.8	2.7	3.9	3.9	1.8
F 20 2_114.3	114.3	0.08	0.79	0.77	2.8	2.7	3.9	3.9	1.8
F 20 2_132.2	132.2	0.03	0.78	0.77	—	—	—	—	1.8
F 20 3_156.3	156.3	0.04	0.81	0.80	2.8	2.7	3.9	3.9	0.72
F 20 3_172.6	172.6	0.04	0.81	0.80	2.8	2.7	3.9	3.9	0.72
F 20 3_184.9	184.9	0.04	0.81	0.80	2.8	2.7	3.9	3.9	0.72
F 20 3_209.3	209.3	0.03	0.81	0.79	2.8	2.7	3.9	3.9	0.72
F 20 3_234.0	234.0	0.03	0.81	0.79	2.8	2.7	3.9	3.9	0.71
F 20 3_255.3	255.3	0.03	0.80	0.79	2.8	2.7	3.9	3.9	0.71
F 20 3_285.2	285.2	0.03	0.80	0.79	2.8	2.7	3.9	3.9	0.71
F 20 3_316.9	316.9	0.03	0.80	0.79	2.8	2.7	3.9	3.9	0.71
F 20 3_372.9	372.9	0.03	0.80	0.79	2.8	2.7	3.9	3.9	0.71
F 20 3_419.3	419.3	0.03	0.80	0.79	2.8	2.7	3.9	3.9	0.66
F 20 3_471.7	471.7	0.03	0.80	0.79	2.8	2.7	3.9	3.9	0.66
F 20 3_545.3	545.3	0.03	0.80	0.79	2.8	2.7	3.9	3.9	0.66

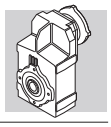

F 20

	i	J (•10-4) [kgm2]									
		SERVO									
		60A		60B 80A		95A		80C 95B 110A		95C 110B	
		SK	SC	SK	SC	SK	SC	SK	SC	SK	SC
F 20 2_6.4	6.4	—	—	—	—	—	—	5.0	5.5	4.8	5.8
F 20 2_7.8	7.8	—	—	—	—	—	—	4.3	4.8	4.2	5.2
F 20 2_8.7	8.7	1.6	1.8	1.6	2.0	4.1	4.6	4.1	4.6	3.9	4.9
F 20 2_10.0	10.0	1.3	1.5	1.3	1.7	3.8	4.3	3.8	4.3	3.7	4.7
F 20 2_11.2	11.2	1.2	1.4	1.2	1.6	3.7	4.1	3.6	4.1	3.5	4.5
F 20 2_14.8	14.8	—	—	—	—	—	—	4.0	4.5	3.9	4.9
F 20 2_18.1	18.1	—	—	—	—	—	—	3.7	4.2	3.5	4.5
F 20 2_20.2	20.2	1.1	1.3	1.1	1.5	3.6	4.0	3.5	4.0	3.4	4.4
F 20 2_23.1	23.1	0.91	1.2	0.93	1.4	3.5	3.9	3.4	3.9	3.3	4.3
F 20 2_25.9	25.9	0.84	1.1	0.86	1.3	3.4	3.8	3.3	3.8	3.2	4.2
F 20 2_30.4	30.4	0.68	0.94	0.70	1.1	3.2	3.7	3.2	3.7	3.0	4.0
F 20 2_33.1	33.1	0.63	0.89	0.65	1.1	3.2	3.6	3.1	3.6	3.0	4.0
F 20 2_37.9	37.9	0.47	0.83	0.59	1.0	3.1	3.6	3.1	3.6	2.9	3.9
F 20 2_41.8	41.8	0.44	0.80	0.56	1.0	3.1	3.5	3.0	3.5	2.9	3.9
F 20 2_44.8	44.8	0.41	0.77	0.53	0.97	3.1	3.5	3.0	3.5	2.9	3.9
F 20 2_50.7	50.7	0.48	0.74	0.50	0.94	3.0	3.5	3.0	3.5	2.8	3.8
F 20 2_56.7	56.7	0.45	0.71	0.47	0.91	3.0	3.4	2.9	3.4	2.8	3.8
F 20 2_61.9	61.9	0.43	0.69	0.45	0.89	3.0	3.4	2.9	3.4	2.8	3.8
F 20 2_69.1	69.1	0.41	0.67	0.43	0.87	3.0	3.4	2.9	3.4	2.8	3.8
F 20 2_76.8	76.8	0.39	0.65	0.41	0.85	2.9	3.4	2.9	3.4	2.8	3.8
F 20 2_90.4	90.4	0.37	0.63	0.39	0.83	2.9	3.4	2.9	3.4	2.7	3.7
F 20 2_101.6	101.6	0.36	0.62	—	—	—	—	2.8	3.3	2.7	3.7
F 20 2_114.3	114.3	0.35	0.61	—	—	—	—	2.8	3.3	2.7	3.7
F 20 2_132.2	132.2	0.30	0.56	—	—	—	—	—	—	—	—
F 20 3_156.3	156.3	0.31	0.57	0.33	0.77	2.9	3.3	2.8	3.3	2.7	3.7
F 20 3_172.6	172.6	0.31	0.57	0.33	0.77	2.9	3.3	2.8	3.3	2.7	3.7
F 20 3_184.9	184.9	0.31	0.57	0.33	0.77	2.9	3.3	2.8	3.3	2.7	3.7
F 20 3_209.3	209.3	0.30	0.56	0.32	0.76	2.9	3.3	2.8	3.3	2.7	3.7
F 20 3_234.0	234.0	0.30	0.56	0.32	0.76	2.9	3.3	2.8	3.3	2.7	3.7
F 20 3_255.3	255.3	0.30	0.56	0.32	0.76	2.9	3.3	2.8	3.3	2.7	3.7
F 20 3_285.2	285.2	0.30	0.56	0.32	0.76	2.9	3.3	2.8	3.3	2.7	3.7
F 20 3_316.9	316.9	0.30	0.56	0.32	0.76	2.9	3.3	2.8	3.3	2.7	3.7
F 20 3_372.9	372.9	0.30	0.56	0.32	0.76	2.9	3.3	2.8	3.3	2.7	3.7
F 20 3_419.3	419.3	0.30	0.56	0.32	0.76	2.9	3.3	2.8	3.3	2.7	3.7
F 20 3_471.7	471.7	0.30	0.56	0.32	0.76	2.9	3.3	2.8	3.3	2.7	3.7
F 20 3_545.3	545.3	0.30	0.56	0.32	0.76	2.9	3.3	2.8	3.3	2.7	3.7

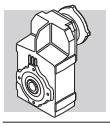

F 25

	i	J (•10-4) [kgm2]							
			IEC						
			63	71	80	90	100	112	
F 25 2_6.9	6.9	2.7	—	—	5.4	5.3	6.5	6.5	4.4
F 25 2_8.4	8.4	1.9	—	—	4.6	4.5	5.7	5.7	3.6
F 25 2_9.4	9.4	1.6	2.3	2.3	4.3	4.2	5.4	5.4	3.3
F 25 2_10.6	10.6	1.9	—	—	4.6	4.5	5.7	5.7	3.6
F 25 2_13.0	13.0	1.3	—	—	4.1	4.0	5.2	5.2	3.0
F 25 2_14.5	14.5	1.1	1.8	1.8	3.9	3.8	5.0	5.0	2.8
F 25 2_16.6	16.6	0.90	1.6	1.6	3.7	3.5	4.7	4.7	2.6
F 25 2_18.6	18.6	0.77	1.5	1.5	3.5	3.4	4.6	4.6	2.5
F 25 2_21.8	21.8	0.57	1.3	1.3	3.3	3.2	4.4	4.4	2.3
F 25 2_23.8	23.8	0.48	1.2	1.2	3.2	3.1	4.3	4.3	2.2
F 25 2_27.2	27.2	0.40	1.1	1.1	3.2	3.0	4.2	4.2	2.1
F 25 2_30.0	30.0	0.35	1.1	1.1	3.1	3.0	4.2	4.2	2.1
F 25 2_32.2	32.2	0.31	1.0	1.0	3.1	2.9	4.2	4.2	2.0
F 25 2_36.4	36.4	0.26	1.0	1.0	3.0	2.9	4.1	4.1	2.0
F 25 2_40.7	40.7	0.22	1.0	0.94	3.0	2.9	4.1	4.1	1.9
F 25 2_44.4	44.4	0.20	0.93	0.92	3.0	2.8	4.0	4.0	1.9
F 25 3_45.6	45.6	0.79	—	—	3.6	3.4	4.6	4.6	2.5
F 25 3_50.8	50.8	0.70	1.4	1.4	3.5	3.3	4.5	4.5	2.4
F 25 3_58.3	58.3	0.58	1.3	1.3	3.3	3.2	4.4	4.4	2.3
F 25 3_65.3	65.3	0.52	1.2	1.2	3.3	3.1	4.4	4.4	2.2
F 25 3_76.6	76.6	0.38	1.1	1.1	3.1	3.0	4.2	4.2	2.1
F 25 3_83.4	83.4	0.32	1.0	1.0	3.1	3.0	4.2	4.2	2.0
F 25 3_95.5	95.5	0.28	1.0	1.0	3.0	2.9	4.1	4.1	2.0
F 25 3_105.4	105.4	0.25	1.0	1.0	3.0	2.9	4.1	4.1	2.0
F 25 3_113.0	113.0	0.23	0.95	0.94	3.0	2.9	4.1	4.1	1.9
F 25 3_127.8	127.8	0.20	0.92	0.91	3.0	2.8	4.0	4.0	1.9
F 25 3_143.0	143.0	0.17	0.90	0.89	2.9	2.8	4.0	4.0	1.9
F 25 3_155.9	155.9	0.15	0.88	0.87	2.9	2.8	4.0	4.0	1.9
F 25 3_174.2	174.2	0.13	0.87	0.86	2.9	2.8	4.0	4.0	1.8
F 25 3_193.6	193.6	0.12	0.85	0.84	2.9	2.7	4.0	4.0	1.8
F 25 3_227.8	227.8	0.10	0.83	0.82	2.9	2.7	3.9	3.9	1.8
F 25 3_256.1	256.1	0.09	0.79	0.78	2.8	2.7	3.9	3.9	1.8
F 25 3_288.1	288.1	0.08	0.78	0.77	2.8	2.7	3.9	3.9	1.8
F 25 3_333.1	333.1	0.03	0.78	0.76	—	—	—	—	1.8
F 25 4_393.9	393.9	0.02	0.80	0.78	2.8	2.7	3.9	3.9	0.70
F 25 4_434.9	434.9	0.02	0.79	0.78	2.8	2.7	3.9	3.9	0.70
F 25 4_466.0	466.0	0.02	0.79	0.78	2.8	2.7	3.9	3.9	0.70
F 25 4_527.3	527.3	0.02	0.79	0.78	2.8	2.7	3.9	3.9	0.70
F 25 4_589.7	589.7	0.02	0.79	0.78	2.8	2.7	3.9	3.9	0.70
F 25 4_643.3	643.3	0.02	0.79	0.78	2.8	2.7	3.9	3.9	0.70
F 25 4_718.7	718.7	0.02	0.79	0.78	2.8	2.7	3.9	3.9	0.70
F 25 4_798.5	798.5	0.01	0.79	0.77	2.8	2.7	3.9	3.9	0.70
F 25 4_939.8	939.8	0.01	0.79	0.77	2.8	2.7	3.9	3.9	0.69
F 25 4_1057	1057	0.01	0.79	0.77	2.8	2.7	3.9	3.9	0.64
F 25 4_1189	1189	0.01	0.78	0.77	2.8	2.7	3.9	3.9	0.64
F 25 4_1374	1374	0.01	0.78	0.77	2.8	2.7	3.9	3.9	0.64

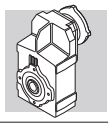

F 25

	i	J (•10-4) [kgm2]									
		SERVO									
		60A		60B 80A		95A		80C 95B 110A		95C 110B	
		SK	SC	SK	SC	SK	SC	SK	SC	SK	SC
F 25 2_6.9	6.9	—	—	—	—	—	—	5.4	5.9	5.3	6.3
F 25 2_8.4	8.4	—	—	—	—	—	—	4.6	5.1	4.5	5.5
F 25 2_9.4	9.4	1.9	2.1	1.9	2.3	4.4	4.9	4.3	4.8	4.2	5.2
F 25 2_10.6	10.6	—	—	—	—	—	—	4.6	5.1	4.5	5.5
F 25 2_13.0	13.0	—	—	—	—	—	—	4.1	4.6	4.0	5.0
F 25 2_14.5	14.5	1.4	1.6	1.4	1.8	3.9	4.4	3.9	4.4	3.8	4.8
F 25 2_16.6	16.6	1.2	1.4	1.2	1.6	3.7	4.2	3.7	4.2	3.5	4.5
F 25 2_18.6	18.6	1.0	1.3	1.1	1.5	3.6	4.0	3.5	4.0	3.4	4.4
F 25 2_21.8	21.8	0.84	1.1	0.86	1.3	3.4	3.8	3.3	3.8	3.2	4.2
F 25 2_23.8	23.8	0.75	1.0	0.77	1.2	3.3	3.7	3.2	3.7	3.1	4.1
F 25 2_27.2	27.2	0.67	0.93	0.69	1.1	3.2	3.7	3.2	3.7	3.0	4.0
F 25 2_30.0	30.0	0.62	0.88	0.64	1.1	3.2	3.6	3.1	3.6	3.0	4.0
F 25 2_32.2	32.2	0.58	0.84	1.4	1.8	3.1	3.6	3.1	3.6	2.9	3.9
F 25 2_36.4	36.4	0.53	0.79	0.55	0.99	3.1	3.5	3.0	3.5	2.9	3.9
F 25 2_40.7	40.7	0.49	0.75	0.51	0.95	3.0	3.5	3.0	3.5	2.9	3.9
F 25 2_44.4	44.4	0.47	0.73	0.49	0.93	3.0	3.5	3.0	3.5	2.8	3.8
F 25 3_45.6	45.6	1.1	1.3	1.1	1.5	3.6	4.0	3.6	4.1	3.4	4.4
F 25 3_50.8	50.8	0.97	1.2	0.99	1.4	3.5	4.0	3.5	4.0	3.3	4.3
F 25 3_58.3	58.3	0.85	1.1	0.87	1.3	3.4	3.8	3.3	3.8	3.2	4.2
F 25 3_65.3	65.3	0.79	1.1	0.84	1.2	3.3	3.8	3.3	3.8	3.1	4.1
F 25 3_76.6	76.6	0.65	0.91	0.67	1.1	3.2	3.6	3.1	3.6	3.0	4.0
F 25 3_83.4	83.4	0.59	0.85	0.61	1.0	3.1	3.6	3.1	3.6	3.0	4.0
F 25 3_95.5	95.5	0.55	0.81	0.57	1.0	3.1	3.5	3.0	3.5	2.9	3.9
F 25 3_105.4	105.4	0.52	0.78	0.54	0.98	3.1	3.5	3.0	3.5	2.9	3.9
F 25 3_113.0	113.0	0.50	0.76	0.52	0.96	3.1	3.5	3.0	3.5	2.9	3.9
F 25 3_127.8	127.8	0.47	0.73	0.49	0.93	3.0	3.5	3.0	3.5	2.8	3.8
F 25 3_143.0	143.0	0.44	0.70	0.46	0.90	3.0	3.4	2.9	3.4	2.8	3.8
F 25 3_155.9	155.9	0.42	0.68	0.44	0.88	3.0	3.4	2.9	3.4	2.8	3.8
F 25 3_174.2	174.2	0.40	0.66	0.42	0.86	3.0	3.4	2.9	3.4	2.8	3.8
F 25 3_193.6	193.6	0.39	0.65	0.41	0.85	2.9	3.4	2.9	3.4	2.7	3.7
F 25 3_227.8	227.8	0.37	0.63	0.39	0.83	2.9	3.4	2.9	3.4	2.7	3.7
F 25 3_256.1	256.1	0.36	0.62	—	—	—	—	2.8	3.3	2.7	3.7
F 25 3_288.1	288.1	0.35	0.61	—	—	—	—	2.8	3.3	2.7	3.7
F 25 3_333.1	333.1	0.30	0.56	—	—	—	—	—	—	—	—
F 25 4_393.9	393.9	0.29	0.55	0.31	0.75	2.8	3.3	2.8	3.3	2.7	3.7
F 25 4_434.9	434.9	0.29	0.55	0.31	0.75	2.8	3.3	2.8	3.3	2.7	3.7
F 25 4_466.0	466.0	0.29	0.55	0.31	0.75	2.8	3.3	2.8	3.3	2.7	3.7
F 25 4_527.3	527.3	0.29	0.55	0.31	0.75	2.8	3.3	2.8	3.3	2.7	3.7
F 25 4_589.7	589.7	0.29	0.55	0.31	0.75	2.8	3.3	2.8	3.3	2.7	3.7
F 25 4_643.3	643.3	0.29	0.55	0.31	0.75	2.8	3.3	2.8	3.3	2.7	3.7
F 25 4_718.7	718.7	0.29	0.55	0.31	0.75	2.8	3.3	2.8	3.3	2.7	3.7
F 25 4_798.5	798.5	0.28	0.54	0.30	0.74	2.8	3.3	2.8	3.3	2.7	3.7
F 25 4_939.8	939.8	0.28	0.54	0.30	0.74	2.8	3.3	2.8	3.3	2.7	3.7
F 25 4_1057	1057	0.28	0.54	0.30	0.74	2.8	3.3	2.8	3.3	2.7	3.7
F 25 4_1189	1189	0.28	0.54	0.30	0.74	2.8	3.3	2.8	3.3	2.7	3.7
F 25 4_1374	1374	0.28	0.54	0.30	0.74	2.8	3.3	2.8	3.3	2.7	3.7

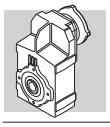

F 31

	i	J (•10-4) [kgm2]								
			IEC							
			63	71	80	90	100	112	132	
F 31 2_6.9	6.9	5.0	—	—	7.8	7.6	8.9	8.9	22	7.1
F 31 2_8.2	8.2	3.7	—	—	6.5	6.3	7.5	7.5	20	5.8
F 31 2_9.0	9.0	3.2	—	—	6.0	5.8	7.0	7.0	20	5.3
F 31 2_10.7	10.7	3.5	—	—	6.3	6.2	7.4	7.4	20	5.6
F 31 2_12.7	12.7	2.6	—	—	5.4	5.3	6.5	6.5	19	4.7
F 31 2_13.9	13.9	2.3	—	—	5.1	4.9	6.2	6.2	19	4.4
F 31 2_16.8	16.8	1.8	—	—	4.6	4.4	5.6	5.6	18	3.9
F 31 2_18.5	18.5	1.5	2.2	2.2	4.2	4.1	5.3	5.3	18	3.5
F 31 2_21.1	21.1	1.1	1.8	1.8	3.9	3.7	5.0	5.0	18	3.2
F 31 2_23.4	23.4	1.0	1.7	1.7	3.7	3.6	4.8	4.8	18	3.0
F 31 2_27.3	27.3	0.78	1.5	1.5	3.5	3.4	4.6	4.6	17	2.8
F 31 2_30.1	30.1	0.65	1.4	1.4	3.4	3.3	4.5	4.5	17	2.7
F 31 2_34.4	34.4	0.53	1.3	1.2	3.3	3.2	4.4	4.4	17	2.6
F 31 2_37.7	37.7	0.47	1.2	1.2	3.2	3.1	4.3	4.3	17	2.5
F 31 2_40.4	40.4	0.42	1.1	1.1	3.2	3.0	4.3	4.3	—	2.5
F 31 2_44.6	44.6	0.37	1.1	1.1	3.1	3.0	4.2	4.2	—	2.4
F 31 3_47.5	47.5	1.6	—	—	4.3	4.2	5.4	5.4	18	3.6
F 31 3_52.1	52.1	1.4	—	—	4.2	4.0	5.3	5.3	18	3.5
F 31 3_62.8	62.8	1.2	—	—	3.9	3.8	5.0	5.0	18	3.2
F 31 3_69.1	69.1	1.0	1.7	1.7	3.7	3.6	4.8	4.8	18	3.0
F 31 3_78.9	78.9	0.72	1.4	1.4	3.5	3.4	4.6	4.6	17	2.8
F 31 3_87.4	87.4	0.66	1.4	1.4	3.4	3.3	4.5	4.5	17	2.7
F 31 3_101.9	101.9	0.54	1.3	1.2	3.3	3.2	4.4	4.4	17	2.6
F 31 3_112.5	112.5	0.46	1.2	1.2	3.2	3.1	4.3	4.3	17	2.5
F 31 3_128.4	128.4	0.38	1.1	1.1	3.1	3.0	4.2	4.2	17	2.4
F 31 3_140.7	140.7	0.35	1.1	1.1	3.1	3.0	4.2	4.2	17	2.4
F 31 3_150.8	150.8	0.31	1.0	1.0	3.1	2.9	4.2	4.2	—	2.4
F 31 3_166.8	166.8	0.28	1.0	1.0	3.0	2.9	4.1	4.1	—	2.3
F 31 3_185.4	185.4	0.24	1.0	1.0	3.0	2.9	4.1	4.1	—	2.3
F 31 3_202.3	202.3	0.21	0.94	0.93	3.0	2.8	4.1	4.1	—	2.3
F 31 3_228.2	228.2	0.18	0.92	0.90	2.9	2.8	4.0	4.0	—	2.2
F 31 3_253.6	253.6	0.16	0.89	0.88	2.9	2.8	4.0	4.0	—	2.2
F 31 3_293.8	293.8	0.13	0.86	0.85	2.9	2.8	4.0	4.0	—	2.2
F 31 3_332.8	332.8	0.11	0.82	0.81	2.9	2.7	4.0	4.0	—	2.2
F 31 3_374.4	374.4	0.10	0.81	0.79	2.9	2.7	3.9	3.9	—	2.2
F 31 4_418.9	418.9	0.09	0.86	0.85	2.9	2.8	3.9	3.9	—	0.77
F 31 4_462.6	462.6	0.08	0.86	0.84	2.9	2.7	3.9	3.9	—	0.77
F 31 4_527.8	527.8	0.08	0.85	0.84	2.9	2.7	3.9	3.9	—	0.76
F 31 4_578.6	578.6	0.08	0.85	0.84	2.9	2.7	3.9	3.9	—	0.76
F 31 4_619.9	619.9	0.07	0.85	0.83	2.9	2.7	3.9	3.9	—	0.76
F 31 4_685.6	685.6	0.07	0.85	0.83	2.9	2.7	3.9	3.9	—	0.76
F 31 4_762.3	762.3	0.07	0.84	0.83	2.9	2.7	3.9	3.9	—	0.75
F 31 4_831.6	831.6	0.07	0.84	0.83	2.9	2.7	3.9	3.9	—	0.75
F 31 4_938.2	938.2	0.07	0.84	0.83	2.9	2.7	3.9	3.9	—	0.75
F 31 4_1042	1042	0.07	0.84	0.83	2.9	2.7	3.9	3.9	—	0.75
F 31 4_1208	1208	0.06	0.84	0.82	2.9	2.7	3.9	3.9	—	0.75
F 31 4_1368	1368	0.06	0.84	0.82	2.9	2.7	3.9	3.9	—	0.75
F 31 4_1539	1539	0.06	0.84	0.82	2.9	2.7	3.9	3.9	—	0.75

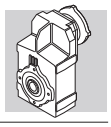

F 31

	i	J (•10-4) [kgm2]											
		SERVO											
		60A		60B 80A		95A		80C 95B 110A		95C 110B		130A	
		SK	SC	SK	SC	SK	SC	SK	SC	SK	SC	SK	SC
F 31 2_6.9	6.9	—	—	—	—	—	—	7.8	8.3	7.6	8.6	7.6	8.6
F 31 2_8.2	8.2	—	—	—	—	—	—	6.5	7.0	6.3	7.3	6.3	7.3
F 31 2_9.0	9.0	—	—	—	—	—	—	6.0	6.5	5.8	6.8	5.8	6.8
F 31 2_10.7	10.7	—	—	—	—	—	—	6.3	6.8	6.2	7.2	6.2	7.2
F 31 2_12.7	12.7	—	—	—	—	—	—	5.4	5.9	5.3	6.3	5.3	6.3
F 31 2_13.9	13.9	—	—	—	—	—	—	5.1	5.6	4.9	5.9	4.9	5.9
F 31 2_16.8	16.8	—	—	—	—	—	—	4.6	5.1	4.4	5.4	4.4	5.4
F 31 2_18.5	18.5	1.8	2.0	1.8	2.2	4.3	4.8	4.2	4.7	4.1	5.1	4.1	5.1
F 31 2_21.1	21.1	1.4	1.6	1.4	1.8	3.9	4.3	3.9	4.4	3.7	4.7	3.7	4.7
F 31 2_23.4	23.4	1.3	1.5	1.3	1.7	3.8	4.3	3.7	4.2	3.6	4.6	3.6	4.6
F 31 2_27.3	27.3	1.1	1.3	1.1	1.5	3.6	4.0	3.5	4.0	3.4	4.4	3.4	4.4
F 31 2_30.1	30.1	0.92	1.2	0.94	1.4	3.5	3.9	3.4	3.9	3.3	4.3	3.3	4.3
F 31 2_34.4	34.4	0.80	1.1	0.82	1.3	3.4	3.8	3.3	3.8	3.2	4.2	3.2	4.2
F 31 2_37.7	37.7	0.74	1.0	0.76	1.2	3.3	3.7	3.2	3.7	3.1	4.1	3.1	4.1
F 31 2_40.4	40.4	0.69	0.95	0.71	1.1	3.2	3.7	3.2	3.7	3.0	4.0	3.0	4.0
F 31 2_44.6	44.6	0.64	0.90	0.66	1.1	3.2	3.6	3.1	3.6	3.0	4.0	3.0	4.0
F 31 3_47.5	47.5	—	—	—	—	—	—	4.3	4.8	4.2	5.2	4.2	5.2
F 31 3_52.1	52.1	—	—	—	—	—	—	4.2	4.7	4.0	5.0	4.0	5.0
F 31 3_62.8	62.8	—	—	—	—	—	—	3.9	4.4	3.8	4.8	3.8	4.8
F 31 3_69.1	69.1	1.3	1.5	1.3	1.7	3.8	4.3	3.7	4.2	3.6	4.6	3.6	4.6
F 31 3_78.9	78.9	0.99	1.3	1.0	1.4	3.5	4.0	3.5	4.0	3.4	4.4	3.4	4.4
F 31 3_87.4	87.4	0.93	1.2	0.95	1.4	3.5	3.9	3.4	3.9	3.3	4.3	3.3	4.3
F 31 3_101.9	101.9	0.81	1.1	0.83	1.3	3.4	3.8	3.3	3.8	3.2	4.2	3.2	4.2
F 31 3_112.5	112.5	0.73	0.99	0.75	1.2	3.3	3.7	3.2	3.7	3.1	4.1	3.1	4.1
F 31 3_128.4	128.4	0.65	0.91	0.67	1.1	3.2	3.6	3.1	3.6	3.0	4.0	3.0	4.0
F 31 3_140.7	140.7	0.62	0.88	0.64	1.1	3.2	3.6	3.1	3.6	3.0	4.0	3.0	4.0
F 31 3_150.8	150.8	0.58	0.84	0.60	1.0	3.1	3.6	3.1	3.6	2.9	3.9	2.9	3.9
F 31 3_166.8	166.8	0.55	0.81	0.57	1.0	3.1	3.5	3.0	3.5	2.9	3.9	2.9	3.9
F 31 3_185.4	185.4	0.51	0.77	0.53	0.97	3.1	3.5	3.0	3.5	2.9	3.9	2.9	3.9
F 31 3_202.3	202.3	0.48	0.74	0.50	0.93	3.0	3.5	3.0	3.5	2.8	3.8	2.8	3.8
F 31 3_228.2	228.2	0.45	0.71	0.47	0.91	3.0	3.4	2.9	3.4	2.8	3.8	2.8	3.8
F 31 3_253.6	253.6	0.43	0.69	0.45	0.89	3.0	3.4	2.9	3.4	2.8	3.8	2.8	3.8
F 31 3_293.8	293.8	0.40	0.66	0.42	0.86	3.0	3.4	2.9	3.4	2.8	3.8	2.8	3.8
F 31 3_332.8	332.8	0.38	0.64	—	—	—	—	2.9	3.4	2.7	3.7	2.7	3.7
F 31 3_374.4	374.4	0.37	0.63	—	—	—	—	2.9	3.4	2.7	3.7	2.7	3.7
F 31 4_418.9	418.9	0.36	0.62	0.38	0.82	2.9	3.3	2.9	3.4	2.8	3.8	—	—
F 31 4_462.6	462.6	0.35	0.61	0.37	0.81	2.9	3.3	2.9	3.4	2.7	3.7	—	—
F 31 4_527.8	527.8	0.35	0.61	0.37	0.81	2.9	3.3	2.9	3.4	2.7	3.7	—	—
F 31 4_578.6	578.6	0.35	0.61	0.37	0.81	2.9	3.3	2.9	3.4	2.7	3.7	—	—
F 31 4_619.9	619.9	0.34	0.60	0.36	0.80	2.9	3.3	2.9	3.4	2.7	3.7	—	—
F 31 4_685.6	685.6	0.34	0.60	0.36	0.80	2.9	3.3	2.9	3.4	2.7	3.7	—	—
F 31 4_762.3	762.3	0.34	0.60	0.36	0.80	2.9	3.3	2.9	3.4	2.7	3.7	—	—
F 31 4_831.6	831.6	0.34	0.60	0.36	0.80	2.9	3.3	2.9	3.4	2.7	3.7	—	—
F 31 4_938.2	938.2	0.34	0.60	0.36	0.80	2.9	3.3	2.9	3.4	2.7	3.7	—	—
F 31 4_1042	1042	0.34	0.60	0.36	0.80	2.9	3.3	2.9	3.4	2.7	3.7	—	—
F 31 4_1208	1208	0.33	0.59	0.35	0.79	2.9	3.3	2.9	3.4	2.7	3.7	—	—
F 31 4_1368	1368	0.33	0.59	0.35	0.79	2.9	3.3	2.9	3.4	2.7	3.7	—	—
F 31 4_1539	1539	0.83	0.59	0.35	0.79	2.9	3.3	2.9	3.4	2.7	3.7	—	—

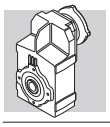

F 41

	i	J (•10-4) [kgm2]								
			IEC							
			63	71	80	90	100	112	132	
F 41 2_6.7	6.7	12	—	—	15	15	18	18	29	21
F 41 2_9.1	9.1	7.2	—	—	10	9.8	13	13	24	16
F 41 2_10.8	10.8	8.0	—	—	11	11	13	13	25	17
F 41 2_14.6	14.6	5.0	—	—	7.7	7.6	10	10	21	14
F 41 2_17.1	17.1	3.5	—	—	6.3	6.2	8.9	8.9	20	12
F 41 2_18.9	18.9	3.1	—	—	5.8	5.7	8.5	8.5	20	12
F 41 2_24.1	24.1	2.1	2.8	2.8	4.9	4.8	7.5	7.5	19	11
F 41 2_30.1	30.1	1.5	2.2	2.2	4.3	4.2	6.9	6.9	18	10
F 41 2_38.2	38.2	0.95	1.7	1.7	3.7	3.6	6.3	6.3	17	9.7
F 41 2_47.9	47.9	0.67	1.4	1.4	3.4	3.3	6.0	6.0	17	9.5
F 41 3_51.5	51.5	3.0	—	—	5.7	5.6	8.4	8.4	19	12
F 41 3_60.2	60.2	2.1	—	—	4.9	4.7	7.5	7.5	19	11
F 41 3_66.5	66.5	1.9	—	—	4.7	4.5	7.3	7.3	18	11
F 41 3_84.9	84.9	1.4	2.1	2.1	4.2	4.0	6.8	6.8	18	10
F 41 3_106.0	106.0	1.1	1.8	1.7	3.8	3.7	6.4	6.4	18	9.8
F 41 3_134.4	134.4	0.66	1.4	1.4	3.4	3.3	6.0	6.0	17	9.4
F 41 3_168.7	168.7	0.49	1.2	1.2	3.2	3.1	5.9	5.9	17	9.3
F 41 3_180.7	180.7	0.43	1.1	1.1	3.2	3.1	5.8	5.8	—	9.2
F 41 3_198.9	198.9	0.39	1.1	1.1	3.1	3.0	5.8	5.8	—	9.2
F 41 3_220.1	220.1	0.36	1.1	1.1	3.1	3.0	5.7	5.7	—	9.1
F 41 3_240.1	240.1	0.31	1.0	1.0	3.1	2.9	5.7	5.7	—	9.1
F 41 3_266.9	266.9	0.28	1.0	1.0	3.0	2.9	5.7	5.7	—	9.1
F 41 3_296.6	296.6	0.23	1.0	1.0	3.0	2.9	5.6	5.6	—	9.0
F 41 3_344.8	344.8	0.19	0.92	0.91	2.9	2.8	5.6	5.6	—	9.0
F 41 4_433.7	433.7	0.21	0.94	0.93	3.0	2.8	4.1	4.1	—	1.9
F 41 4_549.8	549.8	0.19	0.92	0.90	2.9	2.8	4.0	4.0	—	1.9
F 41 4_690.1	690.1	0.18	0.91	0.89	2.9	2.8	4.0	4.0	—	1.9
F 41 4_739.4	739.4	0.17	0.90	0.89	2.9	2.8	4.0	4.0	—	1.9
F 41 4_813.8	813.8	0.17	0.90	0.89	2.9	2.8	4.0	4.0	—	1.9
F 41 4_900.5	900.5	0.17	0.90	0.89	2.9	2.8	4.0	4.0	—	1.9
F 41 4_982.4	982.4	0.17	0.90	0.88	2.9	2.8	4.0	4.0	—	1.9
F 41 4_1092	1092	0.16	0.89	0.88	2.9	2.8	4.0	4.0	—	1.9
F 41 4_1213	1213	0.16	0.89	0.88	2.9	2.8	4.0	4.0	—	1.9
F 41 4_1411	1411	0.16	0.89	0.88	2.9	2.8	4.0	4.0	—	1.9

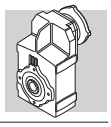

F 41

	i	J (•10-4) [kgm2]																	
		SERVO																	
		60A		60B 80A		80B		95A		80C 95B 110A		95C 110B		130A		130B 180A		180B	
		SK	SC	SK	SC	SK	SC	SK	SC	SK	SC	SK	SC	SK	SC	SK	SC	SK	SC
F 41 2_6.7	6.7	—	—	—	—	—	—	—	—	15	16	15	16	15	16	29	31	29	34
F 41 2_9.1	9.1	—	—	—	—	—	—	—	—	10	11	9.8	11	9.8	11	24	27	24	29
F 41 2_10.8	10.8	—	—	—	—	—	—	—	—	11	12	11	12	11	12	25	27	25	30
F 41 2_14.6	14.6	—	—	—	—	—	—	—	—	7.7	8.2	7.6	8.6	7.6	8.6	22	24	21	26
F 41 2_17.1	17.1	—	—	—	—	—	—	—	—	6.3	6.8	6.2	7.2	6.2	7.2	20	23	20	25
F 41 2_18.9	18.9	—	—	—	—	—	—	—	—	5.8	6.3	5.7	6.7	5.7	6.7	20	23	20	25
F 41 2_24.1	24.1	—	—	—	—	4.9	5.4	4.9	5.4	4.9	5.4	4.8	5.8	4.8	5.8	19	22	19	24
F 41 2_30.1	30.1	—	—	—	—	4.3	4.8	4.3	4.8	4.3	4.8	4.2	5.2	4.2	5.2	18	21	18	23
F 41 2_38.2	38.2	—	—	—	—	3.8	4.2	3.8	4.2	3.7	4.2	3.6	4.6	3.6	4.6	18	20	17	22
F 41 2_47.9	47.9	—	—	—	—	3.5	3.9	3.5	3.9	3.4	3.9	3.3	4.3	3.3	4.3	18	20	17	22
F 41 3_51.5	51.5	—	—	—	—	—	—	—	—	5.7	6.2	5.6	6.6	5.6	6.6	20	22	19	24
F 41 3_60.2	60.2	—	—	—	—	—	—	—	—	4.9	5.4	4.7	5.7	4.7	5.7	19	22	19	24
F 41 3_66.5	66.5	—	—	—	—	—	—	—	—	4.7	5.2	4.5	5.5	4.5	5.5	19	21	18	23
F 41 3_84.9	84.9	—	—	—	—	4.2	4.7	4.2	4.7	4.2	4.7	4.0	5.0	4.0	5.0	18	21	18	23
F 41 3_106.0	106.0	—	—	—	—	3.9	4.4	3.9	4.4	3.8	4.3	3.7	4.7	3.7	4.7	18	21	18	23
F 41 3_134.4	134.4	—	—	—	—	3.5	3.9	3.5	3.9	3.4	3.9	3.3	4.3	3.3	4.3	18	20	17	22
F 41 3_168.7	168.7	—	—	—	—	3.3	3.7	3.3	3.7	3.2	3.7	3.1	4.1	3.1	4.1	17	20	17	22
F 41 3_180.7	180.7	—	—	—	—	3.3	3.7	3.3	3.7	3.2	3.7	3.1	4.1	3.1	4.1	—	—	—	—
F 41 3_198.9	198.9	—	—	—	—	3.2	3.6	3.2	3.6	3.1	3.6	3.0	4.0	3.0	4.0	—	—	—	—
F 41 3_220.1	220.1	—	—	—	—	3.2	3.6	3.2	3.6	3.1	3.6	3.0	4.0	3.0	4.0	—	—	—	—
F 41 3_240.1	240.1	—	—	—	—	3.1	3.6	3.1	3.6	3.1	3.6	2.9	3.9	2.9	3.9	—	—	—	—
F 41 3_266.9	266.9	—	—	—	—	3.1	3.5	3.1	3.5	3.0	3.5	2.9	3.9	2.9	3.9	—	—	—	—
F 41 3_296.6	296.6	—	—	—	—	3.1	3.5	3.1	3.5	3.0	3.5	2.9	3.9	2.9	3.9	—	—	—	—
F 41 3_344.8	344.8	—	—	—	—	3.0	3.4	3.0	3.4	2.9	3.4	2.8	3.8	2.8	3.8	—	—	—	—
F 41 4_433.7	433.7	0.48	0.74	0.50	0.94	—	—	3.0	3.5	3.0	3.5	2.8	3.8	—	—	—	—	—	—
F 41 4_549.8	549.8	0.46	0.72	0.48	0.92	—	—	3.0	3.4	2.9	3.4	2.8	3.8	—	—	—	—	—	—
F 41 4_690.1	690.1	0.45	0.71	0.47	0.91	—	—	3.0	3.4	2.9	3.4	2.8	3.8	—	—	—	—	—	—
F 41 4_739.4	739.4	0.44	0.70	0.46	0.90	—	—	3.0	3.4	2.9	3.4	2.8	3.8	—	—	—	—	—	—
F 41 4_813.8	813.8	0.44	0.70	0.46	0.90	—	—	3.0	3.4	2.9	3.4	2.8	3.8	—	—	—	—	—	—
F 41 4_900.5	900.5	0.44	0.70	0.46	0.90	—	—	3.0	3.4	2.9	3.4	2.8	3.8	—	—	—	—	—	—
F 41 4_982.4	982.4	0.44	0.70	0.46	0.90	—	—	3.0	3.4	2.9	3.4	2.8	3.8	—	—	—	—	—	—
F 41 4_1092	1092	0.43	0.69	0.45	0.89	—	—	3.0	3.4	2.9	3.4	2.8	3.8	—	—	—	—	—	—
F 41 4_1213	1213	0.43	0.69	0.45	0.89	—	—	3.0	3.4	2.9	3.4	2.8	3.8	—	—	—	—	—	—
F 41 4_1411	1411	0.43	0.69	0.45	0.89	—	—	3.0	3.4	2.9	3.4	2.8	3.8	—	—	—	—	—	—

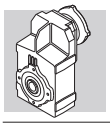

F 51

	i	J (•10-4) [kgm2]										
			IEC									
			63	71	80	90	100	112	132	160	180	
F 51 2_7.2	7.2	25	—	—	28	28	30	30	42	101	103	34
F 51 2_9.1	9.1	17	—	—	20	19	22	22	33	92	94	26
F 51 2_11.1	11.1	16	—	—	19	19	22	22	33	92	94	25
F 51 2_14.0	14.0	11	—	—	14	14	17	17	28	87	89	20
F 51 2_18.8	18.8	7.0	—	—	9.8	9.6	12	12	24	83	85	16
F 51 2_23.8	23.8	4.5	—	—	7.3	7.2	9.9	9.9	21	80	82	13
F 51 2_30.0	30.0	3.1	3.8	3.8	5.9	5.8	8.5	8.5	20	79	81	12
F 51 2_37.1	37.1	2.2	3.0	3.0	5.0	4.9	7.6	7.6	19	78	80	11
F 51 3_48.9	48.9	6.2	—	—	8.9	8.8	12	12	23	82	84	15
F 51 3_65.8	65.8	4.2	—	—	6.9	6.8	9.6	9.6	21	80	82	13
F 51 3_83.2	83.2	2.7	—	—	5.5	5.4	8.1	8.1	19	78	80	12
F 51 3_105.1	105.1	2.0	2.7	2.7	4.8	4.6	7.4	7.4	19	78	80	11
F 51 3_129.9	129.9	1.5	2.2	2.2	4.3	4.1	6.9	6.9	18	77	79	10
F 51 3_165.6	165.6	0.95	1.7	1.7	3.7	3.6	6.3	6.3	17	76	78	9.7
F 51 3_202.4	202.4	0.72	1.4	1.4	3.5	3.3	6.1	6.1	17	76	78	9.5
F 51 3_216.9	216.9	0.64	1.4	1.3	3.4	3.3	6.0	6.0	—	—	—	9.4
F 51 3_239.8	239.8	0.60	1.3	1.3	3.4	3.2	6.0	6.0	—	—	—	9.4
F 51 3_262.1	262.1	0.53	1.3	1.3	3.3	3.2	5.9	5.9	—	—	—	9.3
F 51 3_285.9	285.9	0.46	1.2	1.2	3.2	3.1	5.8	5.8	—	—	—	9.2
F 51 3_317.3	317.3	0.39	1.1	1.1	3.2	3.0	5.8	5.8	—	—	—	9.2
F 51 3_352.5	352.5	0.28	1.1	1.1	3.1	3.0	5.7	5.7	—	—	—	9.1
F 51 4_429.1	429.1	0.36	1.1	1.1	3.1	3.0	5.7	5.7	—	—	—	2.4
F 51 4_530.5	530.5	0.33	1.1	1.0	3.1	3.0	5.7	5.7	—	—	—	2.4
F 51 4_676.3	676.3	0.30	1.0	1.0	3.1	2.9	5.7	5.7	—	—	—	2.4
F 51 4_826.4	826.4	0.28	1.0	1.0	3.0	2.9	5.7	5.7	—	—	—	2.3
F 51 4_885.5	885.5	0.28	1.0	1.0	3.0	2.9	5.7	5.7	—	—	—	2.3
F 51 4_979.4	979.4	0.28	1.0	1.0	3.0	2.9	5.7	5.7	—	—	—	2.3
F 51 4_1070	1070	0.27	1.0	1.0	3.0	2.9	5.6	5.6	—	—	—	2.3
F 51 4_1168	1168	0.27	1.0	1.0	3.0	2.9	5.6	5.6	—	—	—	2.3
F 51 4_1296	1296	0.26	1.0	1.0	3.0	2.9	5.6	5.6	—	—	—	2.3
F 51 4_1439	1439	0.26	1.0	1.0	3.0	2.9	5.6	5.6	—	—	—	2.3

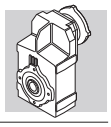

F 51

	i	J (•10-4) [kgm2]											
		SERVO											
		80B		95A		80C 95B 110A		95C 110B 130A		130B 180A		180B	
		SK	SC	SK	SC	SK	SC	SK	SC	SK	SC	SK	SC
F 51 2_7.2	7.2	—	—	—	—	28	29	28	23	42	44	42	47
F 51 2_9.1	9.1	—	—	—	—	20	21	19	20	34	36	33	38
F 51 2_11.1	11.1	—	—	—	—	19	20	19	20	33	35	33	38
F 51 2_14.0	14.0	—	—	—	—	14	15	14	15	28	30	28	33
F 51 2_18.8	18.8	—	—	—	—	9.8	10	9.6	11	24	26	24	29
F 51 2_23.8	23.8	—	—	—	—	7.3	7.8	7.2	8.2	21	24	21	26
F 51 2_30.0	30.0	5.9	6.4	5.9	6.4	5.9	6.4	5.8	6.8	20	23	20	25
F 51 2_37.1	37.1	5.0	5.5	5.0	5.5	5.0	5.5	4.9	5.9	19	22	19	24
F 51 3_48.9	48.9	—	—	—	—	8.9	9.4	8.8	9.8	23	26	23	28
F 51 3_65.8	65.8	—	—	—	—	6.9	7.4	6.8	7.8	21	24	21	26
F 51 3_83.2	83.2	—	—	—	—	5.5	6.0	5.4	6.4	20	22	19	24
F 51 3_105.1	105.1	4.8	5.3	4.8	5.3	4.8	5.3	4.6	5.6	19	21	19	24
F 51 3_129.9	129.9	4.3	4.8	4.3	4.8	4.3	4.8	4.1	5.1	18	21	18	23
F 51 3_165.6	165.6	3.8	4.2	3.8	4.2	3.7	4.2	3.6	4.6	18	20	17	22
F 51 3_202.4	202.4	3.5	4.0	3.5	4.0	3.5	4.0	3.3	4.3	18	20	17	22
F 51 3_216.9	216.9	3.5	3.9	3.5	3.9	3.4	3.9	3.3	4.3	—	—	—	—
F 51 3_239.8	239.8	3.4	3.9	3.4	3.9	3.4	3.9	3.2	4.2	—	—	—	—
F 51 3_262.1	262.1	3.4	3.8	3.4	3.8	3.3	3.8	3.2	4.2	—	—	—	—
F 51 3_285.9	285.9	3.3	3.7	3.3	3.7	3.2	3.7	3.1	4.1	—	—	—	—
F 51 3_317.3	317.3	3.2	3.6	3.2	3.6	3.2	3.7	3.0	4.0	—	—	—	—
F 51 3_352.5	352.5	3.1	3.5	3.1	3.5	3.1	3.6	3.0	4.0	—	—	—	—
F 51 4_429.1	429.1	—	—	3.2	3.6	3.1	3.6	3.0	4.0	—	—	—	—
F 51 4_530.5	530.5	—	—	3.2	3.6	3.1	3.6	3.0	4.0	—	—	—	—
F 51 4_676.3	676.3	—	—	3.1	3.6	3.1	3.6	2.9	3.9	—	—	—	—
F 51 4_826.4	826.4	—	—	3.1	3.5	3.0	3.5	2.9	3.9	—	—	—	—
F 51 4_885.5	885.5	—	—	3.1	3.5	3.0	3.5	2.9	3.9	—	—	—	—
F 51 4_979.4	979.4	—	—	3.1	3.5	3.0	3.5	2.9	3.9	—	—	—	—
F 51 4_1070	1070	—	—	3.1	3.5	3.0	3.5	2.9	3.9	—	—	—	—
F 51 4_1168	1168	—	—	3.1	3.5	3.0	3.5	2.9	3.9	—	—	—	—
F 51 4_1296	1296	—	—	3.1	3.5	3.0	3.5	2.9	3.9	—	—	—	—
F 51 4_1439	1439	—	—	3.1	3.5	3.0	3.5	2.9	3.9	—	—	—	—

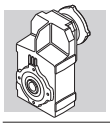

F 60

	i	J (•10-4) [kgm2]										
			IEC									
			63	71	80	90	100	112	132	160	180	
F 60 3_9.0	9.0	40	—	—	—	—	—	—	59	118	116	61
F 60 3_9.7	9.7	38	—	—	—	—	—	—	57	116	114	59
F 60 3_11.8	11.8	25	—	—	28	28	29	29	44	103	101	46
F 60 3_12.7	12.7	24	—	—	27	27	28	28	43	102	100	45
F 60 3_14.5	14.5	18	—	—	21	20	22	22	37	96	94	39
F 60 3_15.7	15.7	17	—	—	20	20	21	21	36	95	93	38
F 60 3_19.1	19.1	10	—	—	13	13	14	14	29	89	86	31
F 60 3_20.7	20.7	9.9	—	—	13	13	14	14	29	88	86	31
F 60 3_23.5	23.5	7.3	—	—	10	10	11	11	26	86	83	28
F 60 3_25.4	25.4	7.1	—	—	9.9	9.9	11	11	26	85	83	28
F 60 3_29.6	29.6	15	—	—	—	—	—	—	34	93	91	36
F 60 3_32.1	32.1	15	—	—	—	—	—	—	34	93	91	36
F 60 3_38.8	38.8	11	—	—	14	13	15	15	30	89	87	32
F 60 3_42.1	42.1	11	—	—	13	13	15	15	29	89	87	31
F 60 3_47.8	47.8	8.2	—	—	11	11	12	12	27	86	84	29
F 60 3_51.8	51.8	8.1	—	—	11	11	12	12	27	86	84	29
F 60 3_63.0	63.0	4.9	—	—	7.7	7.6	8.9	8.9	24	83	81	26
F 60 3_68.3	68.3	4.8	—	—	7.7	7.6	8.9	8.9	24	83	81	26
F 60 3_77.6	77.6	3.7	—	—	6.6	6.5	7.8	7.8	23	82	80	25
F 60 3_84.0	84.0	3.7	—	—	6.5	6.5	7.8	7.8	23	82	80	25
F 60 3_98.2	98.2	2.7	4.2	4.2	5.6	5.5	6.8	6.8	22	81	79	24
F 60 3_106.4	106.4	2.7	4.2	4.2	5.5	5.4	6.8	6.8	22	81	79	24
F 60 3_120.5	120.5	1.8	3.2	3.2	4.6	4.6	5.9	5.9	21	80	78	23
F 60 3_130.5	130.5	1.8	3.2	3.2	4.6	4.6	5.8	5.8	21	80	78	23
F 60 3_150.4	150.4	1.3	2.7	2.7	4.1	4.1	5.4	5.4	20	80	77	22
F 60 3_162.9	162.9	1.3	2.7	2.7	4.1	4.1	5.4	5.4	20	80	77	22
F 60 3_185.9	185.9	0.90	2.4	2.4	3.8	3.7	5.0	5.0	20	79	77	22
F 60 3_201.4	201.4	0.90	2.4	2.4	3.8	3.7	5.0	5.0	20	79	77	22
F 60 3_217.6	217.6	0.70	2.2	2.2	3.6	3.5	4.8	4.8	—	—	—	22
F 60 3_235.8	235.8	0.70	2.2	2.2	3.6	3.5	4.8	4.8	—	—	—	22
F 60 3_259.1	259.1	0.50	2.0	2.0	3.4	3.3	4.6	4.6	—	—	—	22
F 60 3_280.7	280.7	0.50	2.0	2.0	3.4	3.3	4.6	4.6	—	—	—	22

For the values of the moment of inertia of 4-stage gearboxes, please contact our Technical Service department.

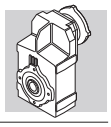

F 60

	i	J (•10-4) [kgm2]									
		SERVO									
		95A		80C 95B 110A		95C 110B 130A		130B 180A		180B	
		SK	SC	SK	SC	SK	SC	SK	SC	SK	SC
F 60 3_9.0	9.0	—	—	—	—	—	—	57	59	59	64
F 60 3_9.7	9.7	—	—	—	—	—	—	55	57	57	62
F 60 3_11.8	11.8	—	—	28	29	28	29	42	44	44	49
F 60 3_12.7	12.7	—	—	27	28	27	28	41	43	43	48
F 60 3_14.5	14.5	—	—	21	22	20	21	35	37	37	42
F 60 3_15.7	15.7	—	—	20	21	20	21	34	36	36	41
F 60 3_19.1	19.1	—	—	13	14	13	14	27	29	29	34
F 60 3_20.7	20.7	—	—	13	14	13	14	27	29	29	34
F 60 3_23.5	23.5	—	—	10	11	10	11	24	27	26	31
F 60 3_25.4	25.4	—	—	9.9	10	9.9	11	24	27	26	31
F 60 3_29.6	29.6	—	—	—	—	—	—	32	34	34	39
F 60 3_32.1	32.1	—	—	—	—	—	—	32	34	34	39
F 60 3_38.8	38.8	—	—	14	15	13	14	28	30	30	35
F 60 3_42.1	42.1	—	—	13	14	13	14	28	30	29	34
F 60 3_47.8	47.8	—	—	11	12	11	12	25	28	27	32
F 60 3_51.8	51.8	—	—	11	12	11	12	25	28	27	32
F 60 3_63.0	63.0	—	—	7.7	8.2	7.6	8.6	22	24	24	29
F 60 3_68.3	68.3	—	—	7.7	8.2	7.6	8.6	22	24	24	29
F 60 3_77.6	77.6	—	—	6.6	7.1	6.5	7.5	21	23	23	28
F 60 3_84.0	84.0	—	—	6.5	7.0	6.5	7.5	21	23	23	28
F 60 3_98.2	98.2	—	—	5.6	6.1	5.5	6.5	20	22	22	27
F 60 3_106.4	106.4	5.5	6.0	5.5	6.0	5.4	6.4	20	22	22	27
F 60 3_120.5	120.5	2.2	2.7	4.6	5.1	4.6	5.6	19	21	21	26
F 60 3_130.5	130.5	2.2	2.7	4.6	5.1	4.6	5.6	19	21	21	26
F 60 3_150.4	150.4	4.1	4.6	4.1	4.6	4.1	5.1	18	21	20	25
F 60 3_162.9	162.9	4.1	4.6	4.1	4.6	4.1	5.1	18	21	20	25
F 60 3_185.9	185.9	3.7	4.2	3.8	4.3	3.7	4.7	18	20	20	25
F 60 3_201.4	201.4	3.7	4.2	3.8	4.3	3.7	4.7	18	20	20	25
F 60 3_217.6	217.6	3.5	4.0	3.6	4.1	3.5	4.5	—	—	—	—
F 60 3_235.8	235.8	3.5	4.0	3.6	4.1	3.5	4.5	—	—	—	—
F 60 3_259.1	259.1	3.3	3.8	3.4	3.9	3.3	4.3	—	—	—	—
F 60 3_280.7	280.7	3.3	3.8	3.4	3.9	3.3	4.3	—	—	—	—

For the values of the moment of inertia of 4-stage gearboxes, please contact our Technical Service department.

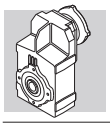

F 70

	i	J (•10-4) [kgm2]									
			IEC								
			80	90	100	112	132	160	180	200	
F 70 3_10.0	10.0	—	—	—	—	—	—	169	167	176	133
F 70 3_10.9	10.9	—	—	—	—	—	—	166	163	173	129
F 70 3_12.8	12.8	—	—	—	—	—	—	139	137	146	102
F 70 3_13.9	13.9	—	—	—	—	—	—	137	135	144	100
F 70 3_16.3	16.3	39	—	—	—	—	58	117	115	124	80
F 70 3_17.7	17.7	37	—	—	—	—	56	116	113	123	79
F 70 3_20.9	20.9	26	—	—	—	—	45	105	102	—	68
F 70 3_22.6	22.6	26	—	—	—	—	44	104	102	—	67
F 70 3_24.6	24.6	21	—	—	—	—	40	99	97	—	62
F 70 3_27.7	27.7	—	—	—	—	—	—	128	126	135	73
F 70 3_30.0	30.0	—	—	—	—	—	—	127	125	134	73
F 70 3_35.4	35.4	—	—	—	—	—	—	114	112	121	77
F 70 3_38.4	38.4	—	—	—	—	—	—	114	111	121	77
F 70 3_45.2	45.2	23	—	—	—	—	42	101	99	108	65
F 70 3_49.0	49.0	23	—	—	—	—	42	101	99	108	65
F 70 3_57.7	57.7	17	—	—	—	—	36	95	93	—	58
F 70 3_62.5	62.5	17	—	—	—	—	36	95	93	—	58
F 70 3_67.9	67.9	14	—	—	—	—	33	92	90	—	55
F 70 3_73.6	73.6	14	—	—	—	—	33	92	90	—	55
F 70 3_85.4	85.4	9.0	11	11	13	13	28	87	85	—	50
F 70 3_92.5	92.5	9.0	11	11	13	13	28	87	85	—	50
F 70 3_101.2	101.2	6.3	8.9	8.8	10	10	25	85	82	—	47
F 70 3_109.6	109.6	6.3	8.9	8.8	10	10	25	85	82	—	47
F 70 3_122.7	122.7	5.1	7.9	7.8	9.1	9.1	24	83	81	—	46
F 70 3_133.0	133.0	5.1	7.9	7.8	9.1	9.1	24	83	81	—	46
F 70 3_153.8	153.8	3.2	6.0	6.0	7.3	7.3	22	81	79	—	44
F 70 3_166.7	166.7	3.2	6.0	6.0	7.3	7.3	22	81	79	—	44
F 70 3_180.9	180.9	2.3	5.1	5.1	6.3	6.3	21	81	78	—	43
F 70 3_196.0	196.0	2.3	5.1	5.0	6.3	6.3	21	81	78	—	43

For the values of the moment of inertia of 4-stage gearboxes, please contact our Technical Service department.

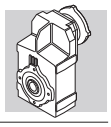

F 80

	i	J (•10-4) [kgm2]										
			IEC									
			80	90	100	112	132	160	180	200	225	
F 80 3_10.3	10.3	—	—	—	—	—	—	—	286	300	578	252
F 80 3_11.2	11.2	—	—	—	—	—	—	—	277	291	569	244
F 80 3_12.9	12.9	—	—	—	—	—	—	217	218	231	509	184
F 80 3_14.0	14.0	—	—	—	—	—	—	212	212	226	504	178
F 80 3_16.2	16.2	—	—	—	—	—	—	173	171	180	464	136
F 80 3_17.6	17.6	—	—	—	—	—	—	170	167	177	461	133
F 80 3_20.3	20.3	60	—	—	—	—	79	139	136	146	431	102
F 80 3_22.0	22.0	58	—	—	—	—	77	136	134	143	429	100
F 80 3_25.2	25.2	43	—	—	—	—	62	121	119	150	413	84
F 80 3_28.8	28.8	—	—	—	—	—	—	—	189	203	480	155
F 80 3_31.3	31.3	—	—	—	—	—	—	—	188	201	479	154
F 80 3_36.0	36.0	—	—	—	—	—	—	155	155	169	447	121
F 80 3_39.0	39.0	—	—	—	—	—	—	154	154	168	446	121
F 80 3_45.3	45.3	—	—	—	—	—	—	133	132	141	425	97
F 80 3_49.1	49.1	—	—	—	—	—	—	133	131	140	425	97
F 80 3_56.7	56.7	35	—	—	—	—	54	113	111	120	406	77
F 80 3_61.5	61.5	35	—	—	—	—	54	113	111	120	406	76
F 80 3_70.4	70.4	27	—	—	—	—	46	105	103	133	397	68
F 80 3_76.3	76.3	27	—	—	—	—	45	105	103	133	396	68
F 80 3_85.2	85.2	20	—	—	—	—	39	99	96	126	389	62
F 80 3_92.3	92.3	20	—	—	—	—	39	99	96	126	389	61
F 80 3_105.0	105.0	14	16	16	17	17	32	92	90	119	383	55
F 80 3_113.8	113.8	14	16	16	17	17	32	92	90	119	382	55
F 80 3_122.5	122.5	13	15	15	17	17	32	91	89	118	381	54
F 80 3_132.7	132.7	13	15	15	16	16	31	91	89	118	381	54
F 80 3_147.9	147.9	8.5	11	11	13	13	27	87	85	114	377	50
F 80 3_160.2	160.2	8.5	11	11	13	13	27	87	84	—	—	50
F 80 3_184.6	184.6	5.1	7.9	7.8	9.1	9.1	24	83	81	—	—	46
F 80 3_200.0	200.0	5.0	7.9	7.8	9.1	9.1	24	83	81	—	—	46

For the values of the moment of inertia of 4-stage gearboxes, please contact our Technical Service department.

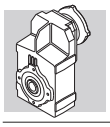

F 90

	i	J (•10-4) [kgm2]											
			IEC										
			80	90	100	112	132	160	180	200	225	250	
F 90 3_10.3	10.3	—	—	—	—	—	—	—	549	559	843	870	850
F 90 3_11.1	11.1	—	—	—	—	—	—	—	529	539	823	850	830
F 90 3_13.4	13.4	—	—	—	—	—	—	—	373	383	667	694	674
F 90 3_14.5	14.5	—	—	—	—	—	—	—	361	371	655	682	662
F 90 3_16.5	16.5	—	—	—	—	—	—	—	286	296	580	607	587
F 90 3_17.9	17.9	—	—	—	—	—	—	—	278	288	572	599	579
F 90 3_20.6	20.6	—	—	—	—	—	—	224	222	232	516	542	513
F 90 3_22.3	22.3	—	—	—	—	—	—	220	217	227	511	537	508
F 90 3_25.4	25.4	103	—	—	—	—	122	181	179	188	474	500	471
F 90 3_28.6	28.6	—	—	—	—	—	—	—	291	301	585	613	593
F 90 3_31.0	31.0	—	—	—	—	—	—	—	289	299	583	610	590
F 90 3_37.4	37.4	—	—	—	—	—	—	—	222	232	516	543	523
F 90 3_40.5	40.5	—	—	—	—	—	—	—	220	230	514	541	521
F 90 3_46.1	46.1	—	—	—	—	—	—	—	186	196	480	507	487
F 90 3_49.9	49.9	—	—	—	—	—	—	—	185	195	479	506	486
F 90 3_57.3	57.3	—	—	—	—	—	—	161	158	168	452	479	450
F 90 3_62.1	62.1	—	—	—	—	—	—	160	158	167	451	478	449
F 90 3_70.8	70.8	61	—	—	—	—	80	139	137	146	432	458	429
F 90 3_76.7	76.7	60	—	—	—	—	79	139	136	146	431	458	429
F 90 3_88.4	88.4	44	—	—	—	—	63	123	120	151	414	441	412
F 90 3_95.8	95.8	44	—	—	—	—	63	122	120	151	414	441	412
F 90 3_103.3	103.3	41	—	—	—	—	59	119	117	146	410	436	408
F 90 3_111.9	111.9	40	—	—	—	—	59	119	116	146	409	436	407
F 90 3_126.8	126.8	26	29	29	30	30	45	105	102	132	395	422	393
F 90 3_137.3	137.3	26	29	29	30	30	45	104	102	132	395	422	393
F 90 3_150.3	150.3	21	24	24	25	25	40	100	97	127	390	417	388
F 90 3_162.8	162.8	21	24	24	25	25	40	100	97	127	390	417	388
F 90 3_179.2	179.2	14	16	16	18	18	33	92	90	—	—	—	381
F 90 3_194.2	194.2	14	16	16	17	17	33	92	90	—	—	—	381

For the values of the moment of inertia of 4-stage gearboxes, please contact our Technical Service department.

63 EXACT RATIOS

i_N	F 10	F 20	F 25	F 31	F 41	F 51	F 60	F 70	F 80	F 90
6.3		6.41210								
7.1	7.40443		6.86957	6.94907	6.72727	7.19408				
8.0		7.83478	8.39375	8.22917						
9.0	8.58204	8.73227	9.35526	9.01630	9.13580	9.05114	8.96000			
10.0	9.76974	10.03069	10.62451	10.74747			9.70667	10.01538	10.33846	10.26577
11.2	11.53759	11.23370			10.77273	11.11005	11.75320	10.85000	11.20000	11.12125
12.5	13.02632		12.98182	12.72727		13.97796	12.73263	12.81731	12.90240	13.41346
14.0	14.64777	14.79842	14.46890	13.94466	14.62963		14.47385	13.88542	13.97760	14.53125
16.0	16.97738		16.62032	16.80000	17.11667		15.68000	16.34455	16.24615	16.52538
18.0		18.08182	18.61364	18.48804	18.89130	18.82155	19.06872	17.70660	17.60000	17.90250
20.0	19.32692	20.15311	21.81818	21.11230			20.65778	20.86538	20.33231	20.56731
22.4	22.82418	23.14973	23.75758	23.38636		23.79447	23.46381	22.60417	22.02667	22.28125
25.0	25.76923	25.92614	27.20455	27.27273	24.11579		25.41913	24.55695	25.22585	25.38622
28.0	29.63462	30.38961	30.03636	30.12121	30.11875	30.03828	29.61538	27.69231	28.84615	28.61169
31.5	32.98462	33.09091	32.18182	34.36364			32.08333	30.00000	31.25000	30.99600
35.5	35.34066	37.89205	36.41958	37.67273	38.18333	37.13636	38.84771	35.43956	36.00000	37.38462
40.0	39.64497	41.83636	40.72727	40.36364			42.08502	38.39286	39.00000	40.50000
45.0	44.66667	44.82468	45.56607	44.64336	47.92667		47.84024	45.19231	45.32967	46.05785
50.0	48.72727	50.72727	50.78571	47.54630	51.49270	48.89965	51.82692	48.95833	49.10714	49.89600
56.0	56.69231	56.72727	58.33718	52.09420	60.24646		63.02761	57.69231	56.73077	57.32308
63.0	62.99145	61.88430	65.33371	62.76111	66.49275	65.84416	68.27991	62.50000	61.45833	62.10000
71.0	71.12308	69.13636	76.58163	69.06725			77.55467	73.55769	70.38462	70.75385
80.0	81.31624	76.81818	83.38889	78.87092	84.88166	83.24111	84.01756	85.38462	76.25000	76.65000
90.0	91.48077	90.40909	95.48772	87.36632			98.19838	92.50000	92.30769	88.39385
100.0	106.02198	101.63636	105.42738	101.88492	106.01061	105.08407	106.38158	101.18343	105.00000	103.33491
112.2		114.34091	112.95791	112.52623			120.45488	109.61538	113.75000	111.94615
125.5	127.12821	132.19481	127.83242	128.37500	134.39596	129.91558	130.49279	122.72727	122.48521	126.77538
140.0		156.30469	142.95238	140.73704			150.35503	132.95455	132.69231	150.30533
160.0		172.57500	155.94805	166.77778	168.69010	165.62338	162.88462	166.66667	160.22727	162.83077
180.0		184.90179	174.22321	185.43056	180.73939	202.39481	185.89349	180.94406	184.61538	179.21958
200.0		209.25000	193.58135	202.28788	198.92028	216.85158	201.38462	196.02273	200.00000	194.15455
225.0		234.00000	227.83036	228.22222	220.13131	239.84416	217.64679	216.52422	218.49174	213.59178
250.0		255.27273	256.12302	253.58025	240.14325	262.11039	259.08284	234.56790	273.89277	231.39109
280.0		285.18750	288.13839	293.83611	266.93818	285.93861	280.67308	280.93645	296.71717	268.72770
315.0		316.87500	333.13010	332.82407	296.59798	317.26753	315.38899	304.34783	353.67893	291.12168
355.0		372.93750		374.42708	344.79515	352.51948	341.67140	372.46964	383.15217	361.84615
400.0		419.25000	393.88686	418.86023		429.09330	399.34008	403.50877	451.49061	392.00000
450.0		471.65625	434.88795	462.60785	433.67975		432.61842	471.15385	489.11483	457.45099
500.0			465.95137	527.76389			489.84985	510.41667	563.87675	495.57191
560.0		545.30357	527.30872	578.58560	549.80165	530.48864	530.67067	606.83761	610.86648	577.48888
630.0			589.67857	619.91314	690.09587	676.29545	611.44379	657.40741	714.86014	625.61296
710.0			643.28571	685.64198	739.38843	826.44545	755.96686	758.97436	774.43182	713.95030
800.0			718.67076	762.32562	813.76478	885.47727	818.96410	822.22222	897.27273	773.44615
900.0			798.52307	831.62795	900.53719	979.36364	885.09695	899.40828	972.04545	910.18225
1000.0			939.80022	938.24691	982.40421	1070.28409	958.85503	974.35897	1058.06885	986.03077
1125.0			1056.50744	1042.49657	1092.01983	1167.58264	1053.60355	1090.90909	1146.24126	1112.25941
1250.0			1188.57087	1207.99290	1213.35537	1295.50909	1141.40385	1181.81818	1277.33630	1204.94769
1400.0			1374.16167	1368.27675	1410.52562	1439.45455		1367.52137	1383.78099	1427.90059
1600.0				1539.31134				1584.61538	1577.62238	1571.37386
1800.0								1716.66667	1709.09091	1702.32168
2000.0								2019.23077	1833.98601	1937.26864
2250.0								2187.50000	1986.81818	2098.70769

2x 3x 4x

F 10...M

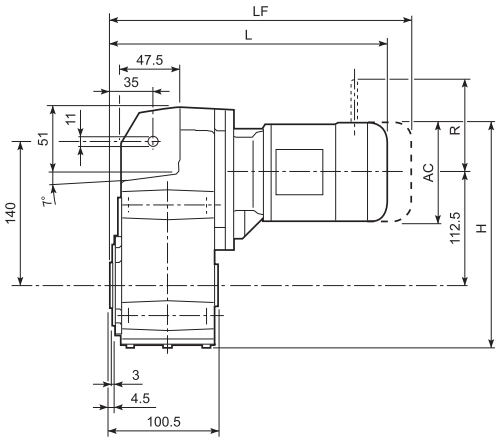

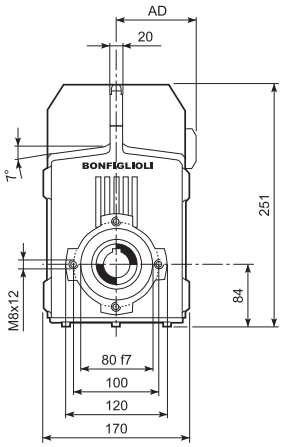

								M...FD M...FA		M...FD		M...FA	
			AC	H	L	AD	Kg	LF	Kg	R	AD	R	AD
F 10 2	**S05**	**M05**	121	220.5	311.5	95	12	377.5	13	96	122	116	95
F 10 2	**S1**	**M1**	138	265.5	340.5	108	14	401.5	17	103	135	124	108
F 10 2	**S2**	**M2S**	156	274.5	369.5	119	18	439.5	21	129	146	134	119
F 10 2	**S3**	**M3S**	195	294	412.5	142	22	508.5	30	160	158	160	142
F 10 2	**S3**	**M3L**	195	294	444.5	142	24	535.5	31	160	158	160	142

F 10...P(IEC)

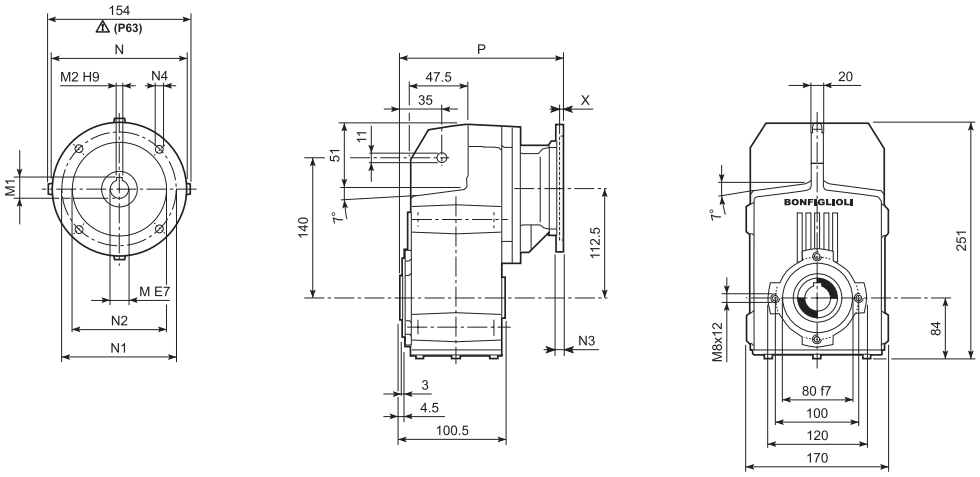

		M	M1	M2	N	N1	N2	N3	N4	X	P	Kg
F 10 2	**P63**	11	12.8	4	140	115	95	—	M8x19	4	185.5	8
F 10 2	**P71**	14	16.3	5	160	130	110	—	M8x16	4.5	185.5	8
F 10 2	**P80**	19	21.8	6	200	165	130	—	M10x14.5	4	205	9
F 10 2	**P90**	24	27.3	8	200	165	130	—	M10x14.5	4	205	9
F 10 2	**P100**	28	31.3	8	250	215	180	—	M12x16	4.5	215	13
F 10 2	**P112**	28	31.3	8	250	215	180	—	M12x16	4.5	215	13

F 10...HS

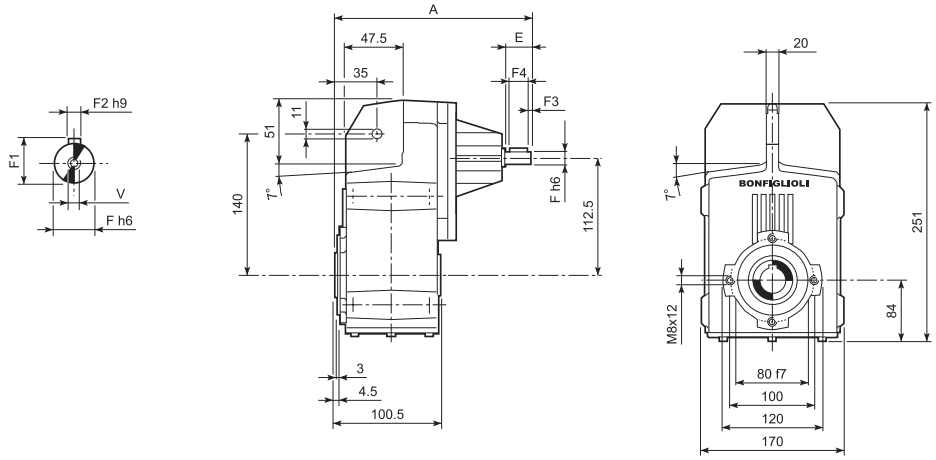

		A	E	F	F1	F2	F3	F4	V	Kg
F 10 2	**HS**	192	40	16	18	5	2.5	35	M6x16	7.5

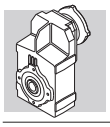

F 10...SK / SC

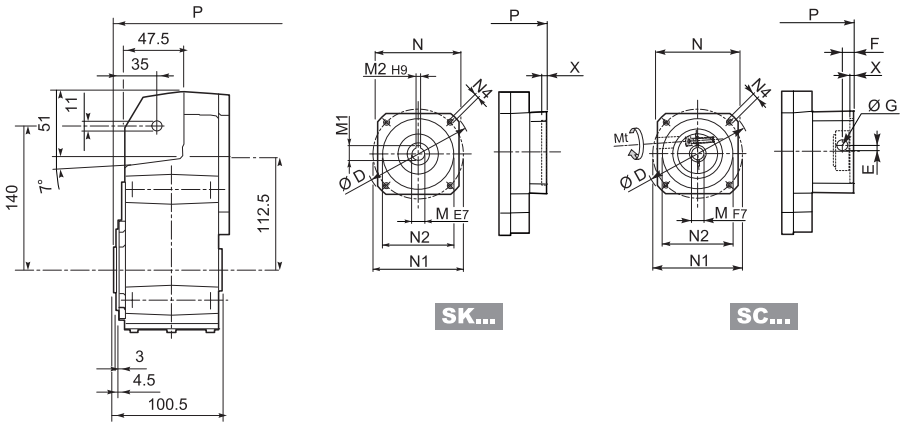

		D	M	M1	M2	N	N1	N2	N4	X	P	Kg
F 10 2	**SK 60A**	102	11	12.8	4	82	75	60	M5x10	3.5	157	8
F 10 2	**SK 60B**	102	14	16.3	5	82	75	60	M5x10	4	164	8
F 10 2	**SK 80A**	115	14	16.3	5	90	100	80	M6x12	4	164	8
F 10 2	**SK 80C**	120	19	21.8	6	96	100	80	M6x12	4	205	9
F 10 2	**SK 95A**	130	14	16.3	5	102	115	95	M8x12	4	205	9
F 10 2	**SK 95B**	130	19	21.8	6	102	115	95	M8x12	4	205	9
F 10 2	**SK 95C**	130	24	27.3	8	102	115	95	M8x12	4	205	9
F 10 2	**SK 110A**	150	19	21.8	6	120	130	110	M8x12	5	205	9
F 10 2	**SK 110B**	150	24	27.3	8	120	130	110	M8x12	5	205	9

			Mt [Nm]	D	E	F	G	M	N	N1	N2	N4	X	P	Kg
F 10 2	**SC 60A**	M6	15	102	7	12.5	12.5	11	82	75	60	M5x10	4	184	8
F 10 2	**SC 60B**	M6	15	102	7	12.5	12.5	14	82	75	60	M5x10	4	184	9
F 10 2	**SC 80A**	M6	15	115	6	12.5	12.5	14	90	100	80	M6x12	4	184	9
F 10 2	**SC 80C**	M6	15	120	15.5	14.5	17.75	19	96	100	80	M6x12	4	228.5	10
F 10 2	**SC 95A**	M6	15	130	16.5	15	17.75	14	102	115	95	M8x16	4	228.5	10
F 10 2	**SC 95B**	M6	15	130	16.5	15	17.75	19	102	115	95	M8x16	4	228.5	10
F 10 2	**SC 95C**	M6	15	130	16.5	15	17.75	24	102	115	95	M8x16	4	228.5	10
F 10 2	**SC 110A**	M6	15	150	16.5	16	17.75	19	120	130	110	M8x16	5	228.5	11
F 10 2	**SC 110B**	M6	15	150	16.5	16	17.75	24	120	130	110	M8x16	5	228.5	11

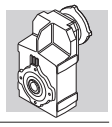

F 10

F 10...H

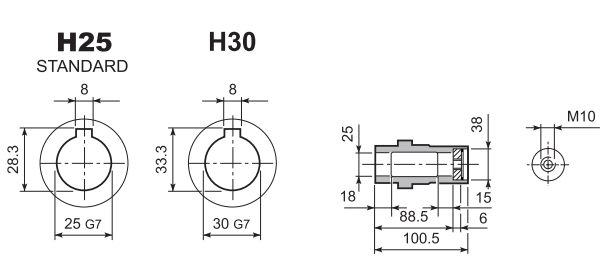

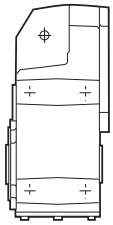

F 10...S

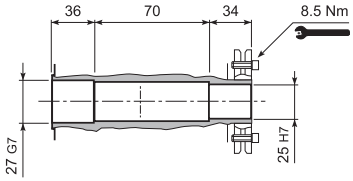

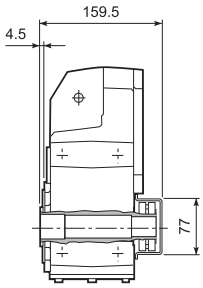

F 10...R

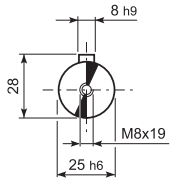

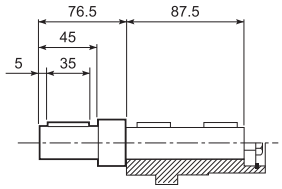

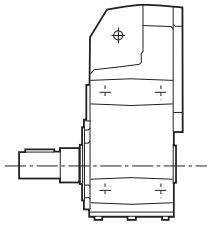

F 10...QF

	Ø
QF25	25
QF30	30

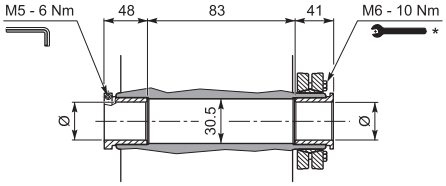

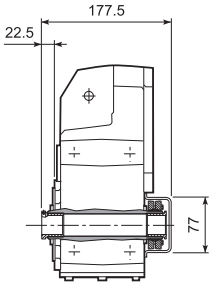

F 10...F...

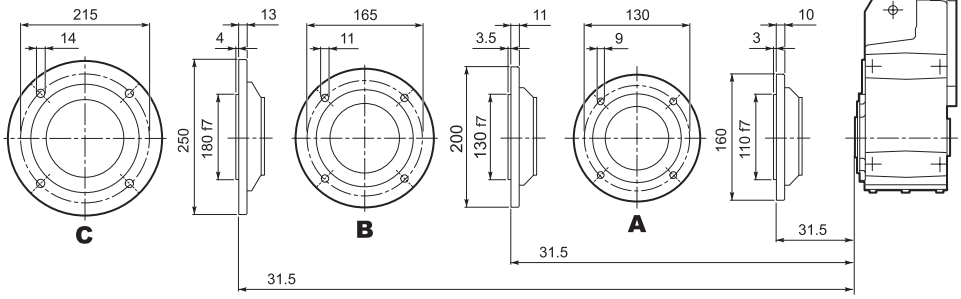

* Follow the MOUNTING INSTRUCTIONS supplied with the gearbox.

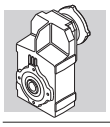

F 20...M

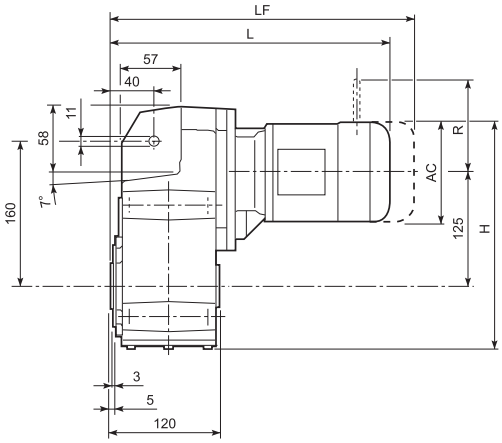

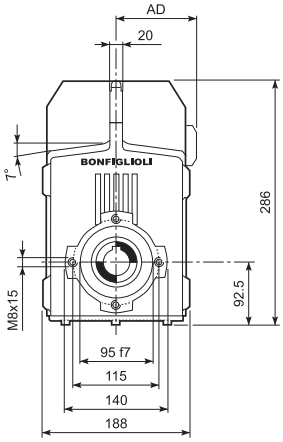

								M...FD M...FA		M...FD		M...FA	
			AC	H	L	AD	Kg	LF	Kg	R	AD	R	AD
F 20 2	**S05**	**M05**	121	278.2	323.5	95	15	389.5	17	96	122	116	95
F 20 2	**S1**	**M1**	138	286.7	352.5	108	17	413.5	20	103	135	124	108
F 20 2	**S2**	**M2S**	156	295.7	381.5	119	21	451.5	25	129	146	134	119
F 20 2	**S3**	**M3S**	195	315.2	424.5	142	26	520.5	33	160	158	160	142
F 20 2	**S3**	**M3L**	195	315.2	456.5	142	31	547.5	38	160	158	160	142
F 20 3	**S05**	**M05**	121	278.2	379	95	17	445	18	96	122	116	95
F 20 3	**S1**	**M1**	138	286.7	408	108	19	469	21	103	135	124	108
F 20 3	**S2**	**M2S**	156	295.7	437	119	22	507	26	129	146	134	119
F 20 3	**S3**	**M3S**	195	315.2	480	142	27	576	34	160	158	160	142
F 20 3	**S3**	**M3L**	195	315.2	512	142	32	603	39	160	158	160	142

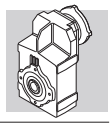

F 20...P(IEC)

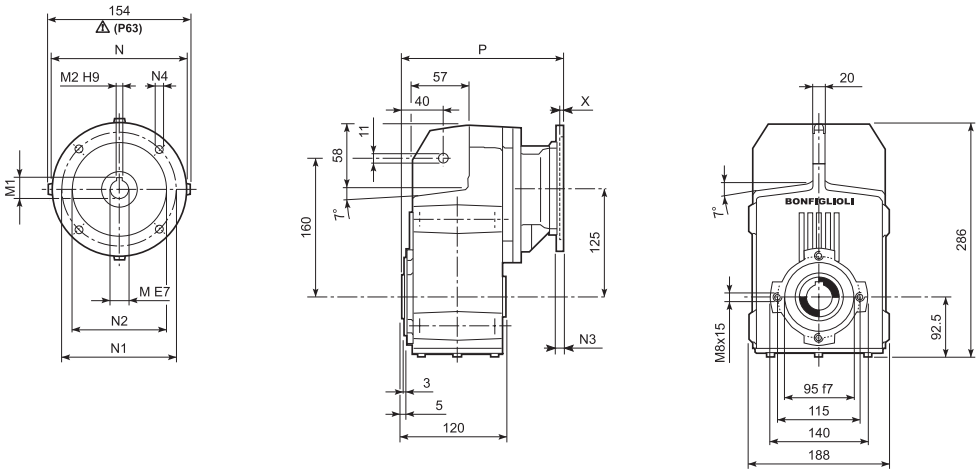

		M	M1	M2	N	N1	N2	N3	N4	X	P	Kg
F 20 2	**P63**	11	12.8	4	140	115	95	—	M8x19	4	197.5	12
F 20 2	**P71**	14	16.3	5	160	130	110	—	M8x16	4.5	197.5	12
F 20 2	**P80**	19	21.8	6	200	165	130	—	M10x14.5	4	217	13
F 20 2	**P90**	24	27.3	8	200	165	130	—	M10x14.5	4	217	12
F 20 2	**P100**	28	31.3	8	250	215	180	—	M12x16	4.5	227	16
F 20 2	**P112**	28	31.3	8	250	215	180	—	M12x16	4.5	227	16
F 20 3	**P63**	11	12.8	4	140	115	95	—	M8x19	4	253	13
F 20 3	**P71**	14	16.3	5	160	130	110	—	M8x16	4.5	253	13
F 20 3	**P80**	19	21.8	6	200	165	130	—	M10x14.5	4	272.5	14
F 20 3	**P90**	24	27.3	8	200	165	130	—	M10x14.5	4	272.5	14
F 20 3	**P100**	28	31.3	8	250	215	180	—	M12x16	4.5	282.5	18
F 20 3	**P112**	28	31.3	8	250	215	180	—	M12x16	4.5	282.5	18

F 20...HS

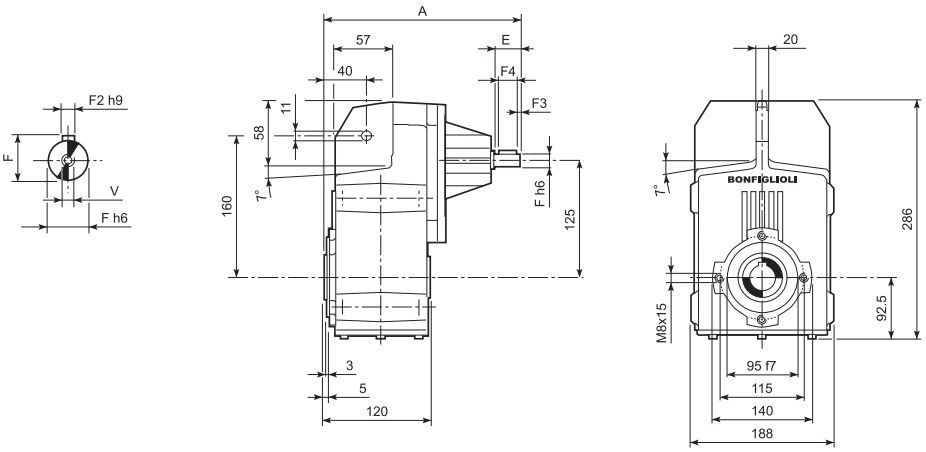

		A	E	F	F1	F2	F3	F4	V	Kg
F 20 2	**HS**	247.5	40	19	21.5	6	2.5	35	M6x16	11.5
F 20 3		260	40	16	18	5	2.5	35	M6x16	12.4

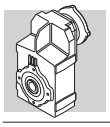

F 20...SK / SC

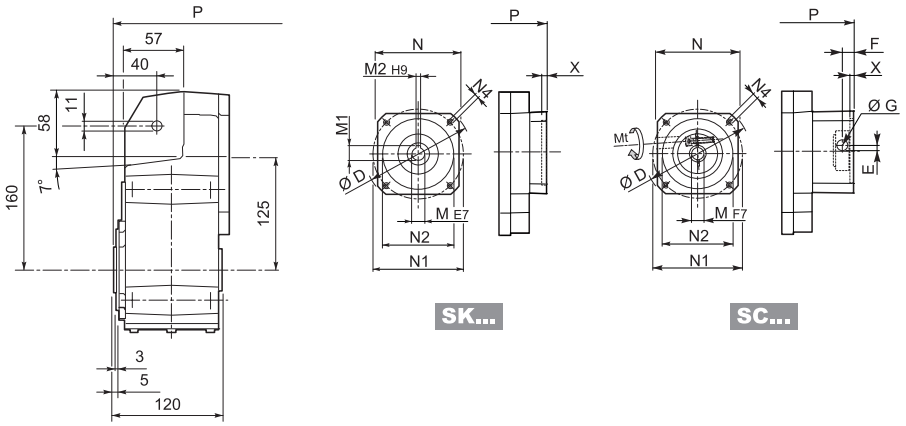

											2x		3x	
		D	M	M1	M2	N	N1	N2	N4	X	P	Kg	P	Kg
F 20 2/3	**SK 60A**	102	11	12.8	4	82	75	60	M5x10	3.5	169	11	224.5	12
F 20 2/3	**SK 60B**	102	14	16.3	5	82	75	60	M5x10	4	176	12	231.5	13
F 20 2/3	**SK 80A**	115	14	16.3	5	90	100	80	M6x12	4	217	12	231.5	13
F 20 2/3	**SK 80C**	120	19	21.8	6	96	100	80	M6x12	4	217	13	272.5	14
F 20 2/3	**SK 95A**	130	14	16.3	5	102	115	95	M8x12	4	217	13	272.5	14
F 20 2/3	**SK 95B**	130	19	21.8	6	102	115	95	M8x12	4	217	13	272.5	14
F 20 2/3	**SK 95C**	130	24	27.3	8	102	115	95	M8x12	4	217	13	272.5	14
F 20 2/3	**SK 110A**	150	19	21.8	6	120	130	110	M8x12	5	217	13	272.5	14
F 20 2/3	**SK 110B**	150	24	27.3	8	120	130	110	M8x12	5	217	13	272.5	14

														2x		3x	
			Mt [Nm]	D	E	F	G	M	N	N1	N2	N4	X	P	Kg	P	Kg
F 20 2/3	**SC 60A**	M6	15	102	7	12.5	12.5	11	82	75	60	M5x10	4	196	12	251.5	13
F 20 2/3	**SC 60B**	M6	15	102	7	12.5	12.5	14	82	75	60	M5x10	4	196	13	251.5	14
F 20 2/3	**SC 80A**	M6	15	115	6	12.5	12.5	14	90	100	80	M6x12	4	196	13	251.5	14
F 20 2/3	**SC 80C**	M6	15	120	15.5	14.5	17.75	19	96	100	80	M6x12	4	240.5	14	296	15
F 20 2/3	**SC 95A**	M6	15	130	16.5	15	17.75	14	102	115	95	M8x16	4	240.5	14	296	15
F 20 2/3	**SC 95B**	M6	15	130	16.5	15	17.75	19	102	115	95	M8x16	4	240.5	14	296	15
F 20 2/3	**SC 95C**	M6	15	130	16.5	15	17.75	24	102	115	95	M8x16	4	240.5	14	296	15
F 20 2/3	**SC 110A**	M6	15	150	16.5	16	17.75	19	120	130	110	M8x16	5	240.5	15	296	16
F 20 2/3	**SC 110B**	M6	15	150	16.5	16	17.75	24	120	130	110	M8x16	5	240.5	15	296	16

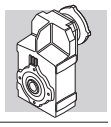

F 20

F 20...H

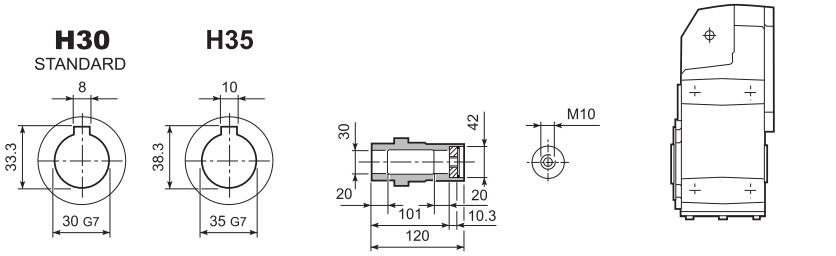

F 20...S

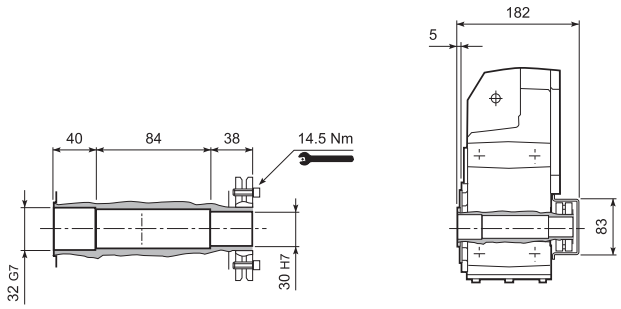

F 20...R

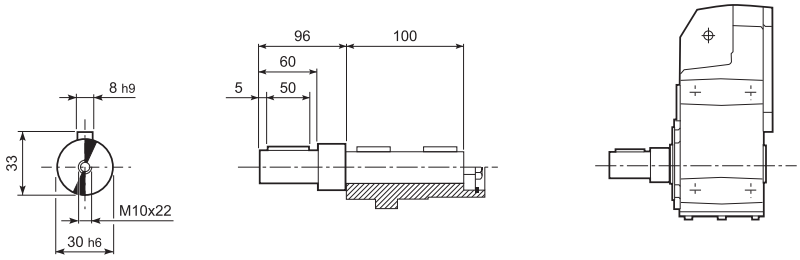

F 20...QF

	Ø
QF25	25
QF30	30

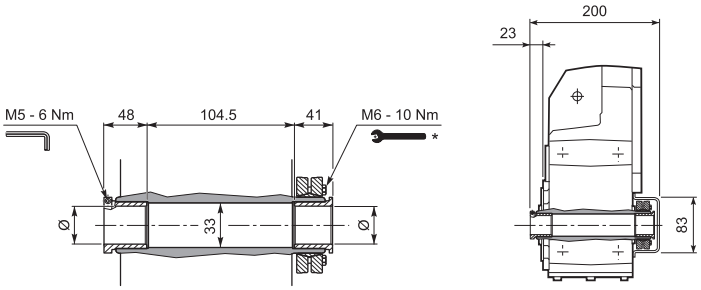

F 20...F...

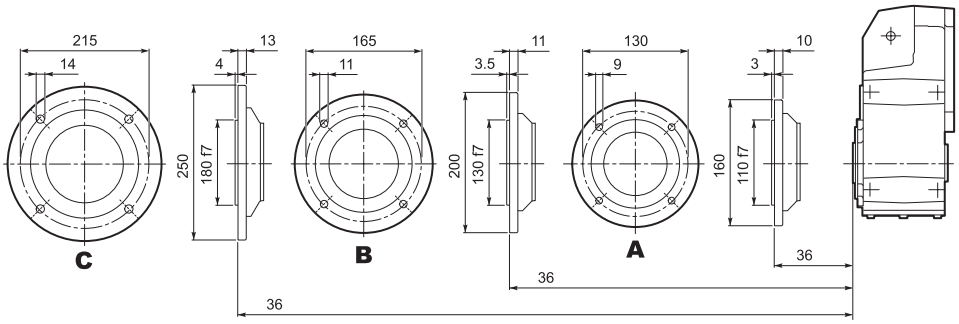

* Follow the MOUNTING INSTRUCTIONS supplied with the gearbox.

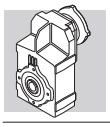

F 25...M

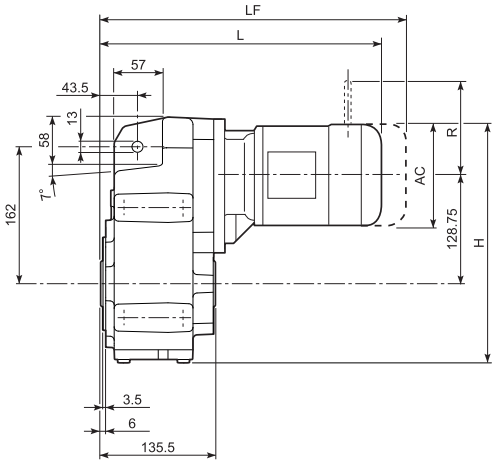

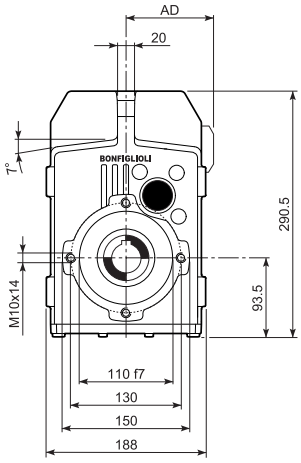

								M...FD M...FA		M...FD		M...FA	
			AC	H	L	AD	Kg	LF	Kg	R	AD	R	AD
F 25 2/3	**S05**	**M05**	121	283	339	95	15	405	17	96	122	116	95
F 25 2/3	**S1**	**M1**	138	291.5	368	108	17	429	20	103	135	124	108
F 25 2/3	**S2**	**M2S**	156	300.5	397	119	21	467	25	129	146	134	119
F 25 2/3	**S3**	**M3S**	195	320	440	142	26	536	33	160	158	160	142
F 25 2/3	**S3**	**M3L**	195	320	472	142	31	563	38	160	158	160	142
F 25 4	**S05**	**M05**	121	283	394.5	95	17	460.5	18	96	122	116	95
F 25 4	**S1**	**M1**	138	291.5	423.5	108	19	484.5	21	103	135	124	108
F 25 4	**S2**	**M2S**	156	300.5	452.5	119	22	522.5	26	129	146	134	119
F 25 4	**S3**	**M3S**	195	320	495.5	142	27	591.5	34	160	158	160	142
F 25 4	**S3**	**M3L**	195	320	527.5	142	32	618.5	39	160	158	160	142

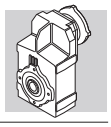

F 25...P(IEC)

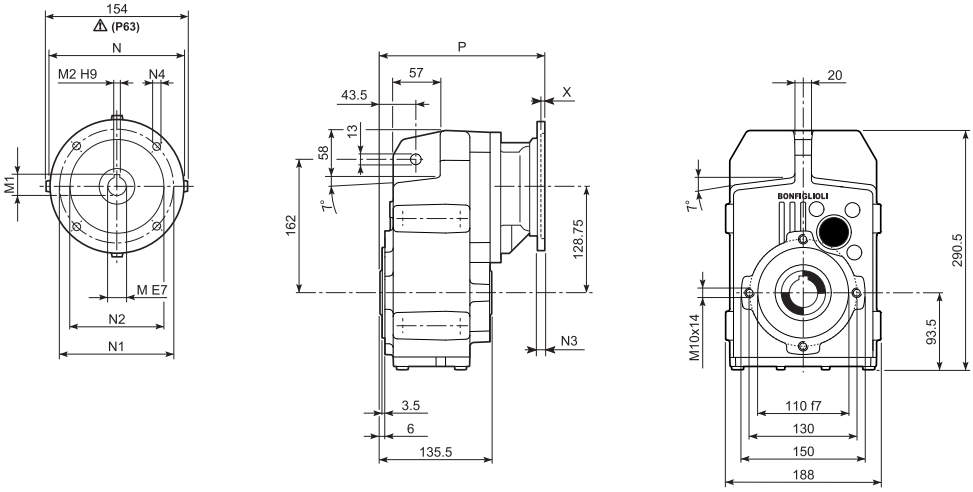

		M	M1	M2	N	N1	N2	N3	N4	X	P	Kg
F 25 2/3	**P63**	11	12.8	4	140	115	95	—	M8x19	4	213	12
F 25 2/3	**P71**	14	16.3	5	160	130	110	—	M8x16	4.5	213	12
F 25 2/3	**P80**	19	21.8	6	200	165	130	—	M10x14.5	4	232.5	13
F 25 2/3	**P90**	24	27.3	8	200	165	130	—	M10x14.5	4	232.5	13
F 25 2/3	**P100**	28	31.3	8	250	215	180	—	M12x16	4.5	242.5	16
F 25 2/3	**P112**	28	31.3	8	250	215	180	—	M12x16	4.5	242.5	16
F 25 4	**P63**	11	12.8	4	140	115	95	—	M8x19	4	268.5	13
F 25 4	**P71**	14	16.3	5	160	130	110	—	M8x16	4.5	268.5	13
F 25 4	**P80**	19	21.8	6	200	165	130	—	M10x14.5	4	288	14
F 25 4	**P90**	24	27.3	8	200	165	130	—	M10x14.5	4	288	14
F 25 4	**P100**	28	31.3	8	250	215	180	—	M12x16	4.5	298	18
F 25 4	**P112**	28	31.3	8	250	215	180	—	M12x16	4.5	298	18

F 25...HS

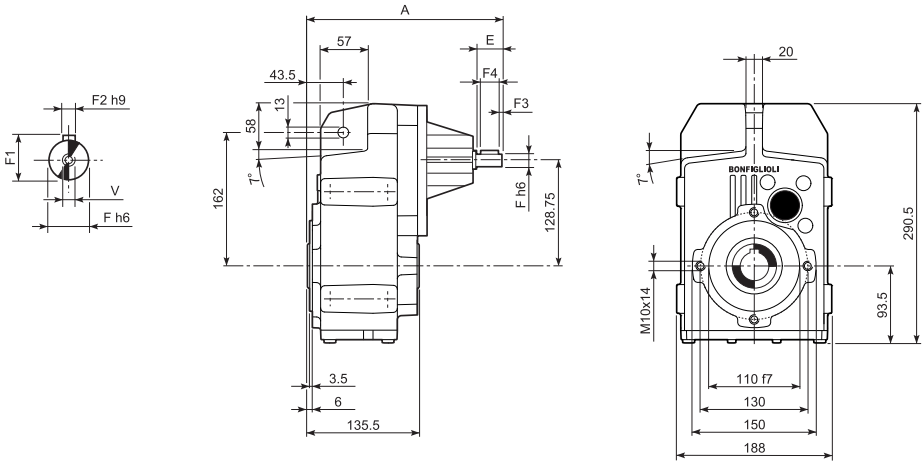

		A	E	F	F1	F2	F3	F4	V	Kg
F 25 2		263	40	19	21.5	6	2.5	35	M6x16	11.5
F 25 3	**HS**	263	40	19	21.5	6	2.5	35	M6x16	11.5
F 25 4		275.5	40	16	18	5	2.5	35	M6x16	12.5

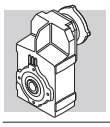

F 25...SK / SC

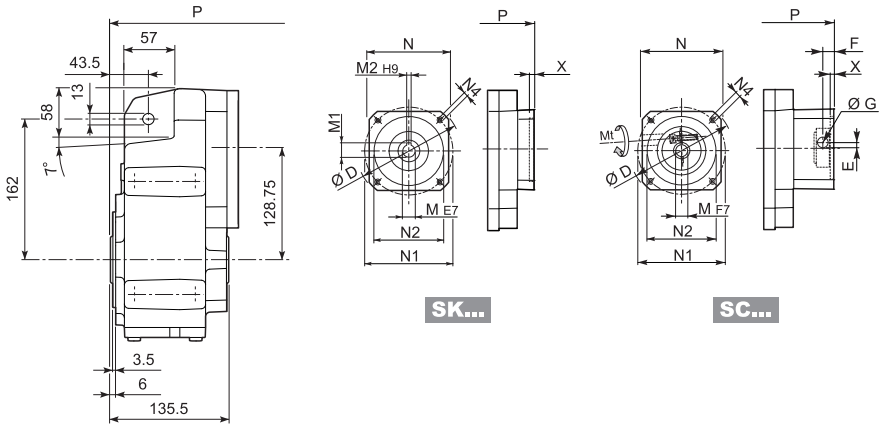

											2/3x		4x	
		D	M	M1	M2	N	N1	N2	N4	X	P	Kg	P	Kg
F 25 2/3/4	**SK 60A**	102	11	12.8	4	82	75	60	M5x10	3.5	184.5	11	240	12
F 25 2/3/4	**SK 60B**	102	14	16.3	5	82	75	60	M5x10	4	191.5	12	247	13
F 25 2/3/4	**SK 80A**	115	14	16.3	5	90	100	80	M6x12	4	191.5	12	247	13
F 25 2/3/4	**SK 80C**	120	19	21.8	6	96	100	80	M6x12	4	232.5	13	288	14
F 25 2/3/4	**SK 95A**	130	14	16.3	5	102	115	95	M8x12	4	232.5	13	288	14
F 25 2/3/4	**SK 95B**	130	19	21.8	6	102	115	95	M8x12	4	232.5	13	288	14
F 25 2/3/4	**SK 95C**	130	24	27.3	8	102	115	95	M8x12	4	232.5	13	288	14
F 25 2/3/4	**SK 110A**	150	19	21.8	6	120	130	110	M8x12	5	232.5	13	288	14
F 25 2/3/4	**SK 110B**	150	24	27.3	8	120	130	110	M8x12	5	232.5	13	288	14

														2/3x		4x	
			Mt [Nm]	D	E	F	G	M	N	N1	N2	N4	X	P	Kg	P	Kg
F 25 2/3/4	**SC 60A**	M6	15	102	7	12.5	12.5	11	82	75	60	M5x10	4	211.5	12	267	13
F 25 2/3/4	**SC 60B**	M6	15	102	7	12.5	12.5	14	82	75	60	M5x10	4	211.5	13	267	14
F 25 2/3/4	**SC 80A**	M6	15	115	6	12.5	12.5	14	90	100	80	M6x12	4	211.5	13	267	14
F 25 2/3/4	**SC 80C**	M6	15	120	15.5	14.5	17.75	19	96	100	80	M6x12	4	256	14	311.5	15
F 25 2/3/4	**SC 95A**	M6	15	130	16.5	15	17.75	14	102	115	95	M8x16	4	256	14	311.5	15
F 25 2/3/4	**SC 95B**	M6	15	130	16.5	15	17.75	19	102	115	95	M8x16	4	256	14	311.5	15
F 25 2/3/4	**SC 95C**	M6	15	130	16.5	15	17.75	24	102	115	95	M8x16	4	256	14	311.5	15
F 25 2/3/4	**SC 110A**	M6	15	150	16.5	16	17.75	19	120	130	110	M8x16	5	256	15	311.5	16
F 25 2/3/4	**SC 110B**	M6	15	150	16.5	16	17.75	24	120	130	110	M8x16	5	256	15	311.5	16

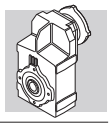

F 25

F 25...H

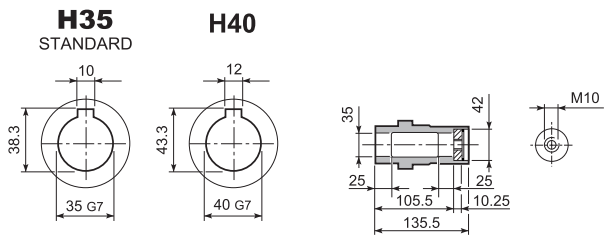

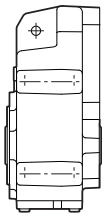

F 25...S

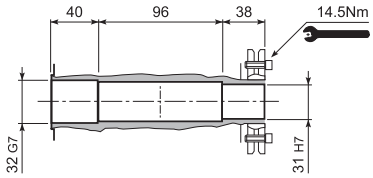

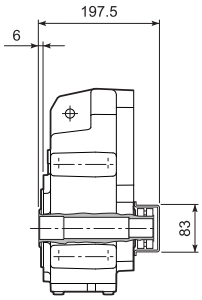

F 25...R

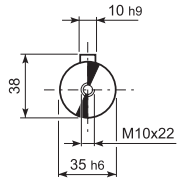

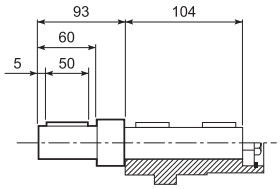

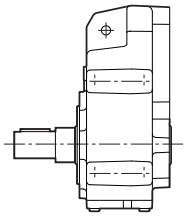

F 25...QF

	Ø
QF30	30
QF32	32

$M_{n2\ max}$ [Nm]	
F 25 QF30	350

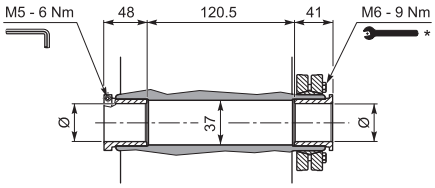

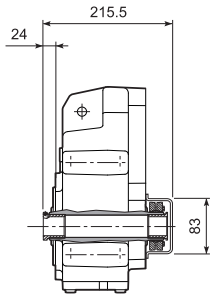

F 25...F...

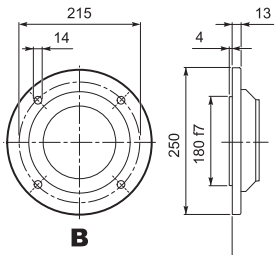

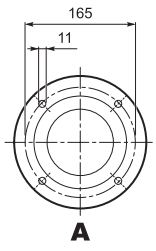

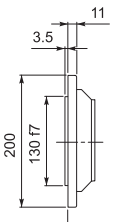

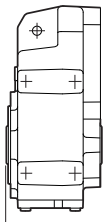

33

33.5

* Follow the MOUNTING INSTRUCTIONS supplied with the gearbox.

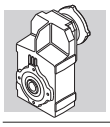

F 31...M

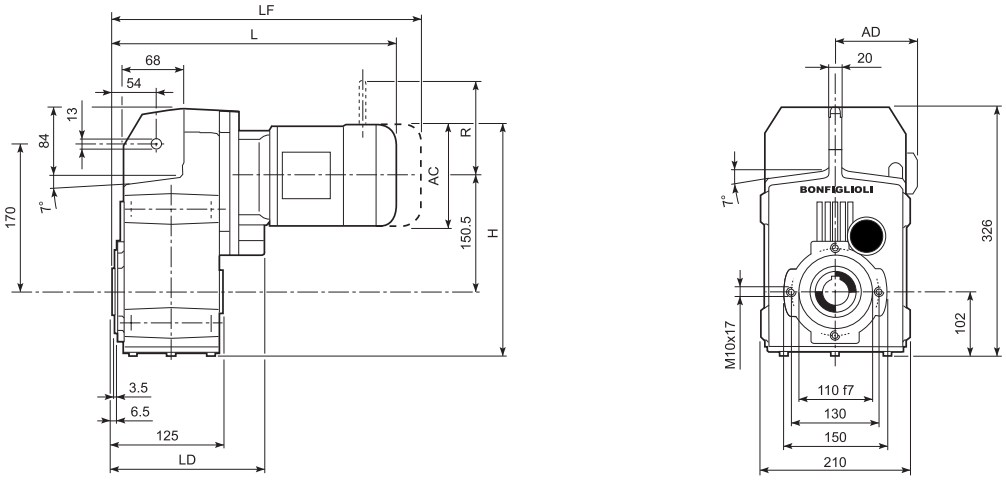

									M...FD M...FA		M...FD		M...FA	
			AC	H	L	LD	AD	Kg	LF	Kg	R	AD	R	AD
F 31 2/3	**S1**	**M1**	138	321.3	380.5	183.5	108	22	441.5	25	103	135	124	108
F 31 2/3	**S2**	**M2S**	156	330.3	409.5	195.5	119	26	479.5	30	129	146	134	119
F 31 2/3	**S3**	**M3S**	195	349.8	452.5	205.5	142	31	548.5	38	160	158	160	142
F 31 2/3	**S3**	**M3L**	195	349.8	484.5	205.5	142	38	575.5	45	160	158	160	142
F 31 2/3	**S4**	**M4**	258	381.3	592.5	—	193	72	701.5	79	204	210	200	193
F 31 2/3	**S4**	**M4L**	258	381.3	592.5	—	193	78	701.5	85	204	210	200	193
F 31 4	**S05**	**M05**	121	312.8	409	—	95	20	475	22	96	122	116	95
F 31 4	**S1**	**M1**	138	321.3	438	—	108	22	499	25	103	135	124	108
F 31 4	**S2**	**M2S**	156	330.3	467	—	119	26	537	31	129	146	134	119
F 31 4	**S3**	**M3S**	195	349.8	510	—	142	31	606	39	160	158	160	142
F 31 4	**S3**	**M3L**	195	349.8	542	—	142	38	633	46	160	158	160	142

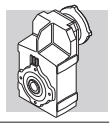

F 31...P(IEC)

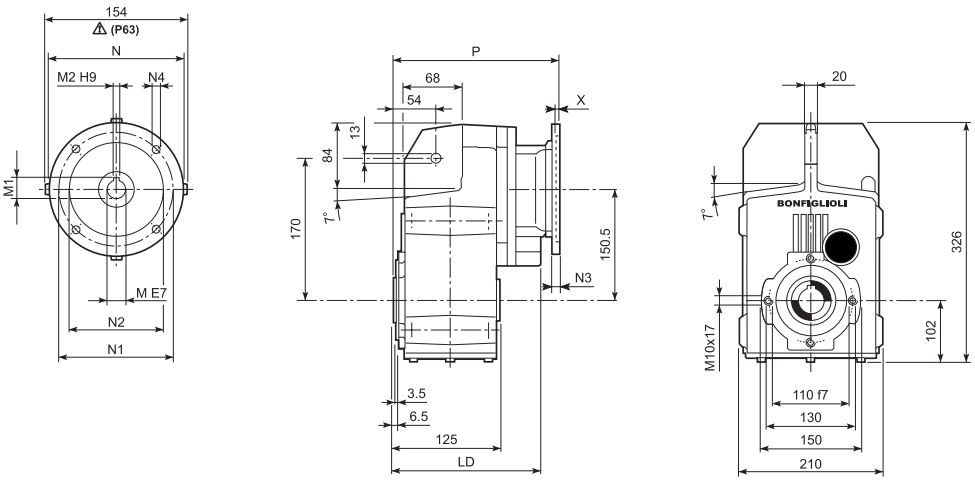

		LD	M	M1	M2	N	N1	N2	N3	N4	X	P	Kg
F 31 2/3	**P63**	195.5	11	12.8	4	140	115	95	—	M8x19	4	225.5	17
F 31 2/3	**P71**	195.5	14	16.3	5	160	130	110	—	M8x16	4.5	225.5	17
F 31 2/3	**P80**	205.5	19	21.8	6	200	165	130	—	M10x14.5	4	245	18
F 31 2/3	**P90**	205.5	24	27.3	8	200	165	130	—	M10x14.5	4	245	17
F 31 2/3	**P100**	205.5	28	31.3	8	250	215	180	—	M12x16	4.5	255	21
F 31 2/3	**P112**	205.5	28	31.3	8	250	215	180	—	M12x16	4.5	255	21
F 31 2/3	**P132**	—	38	41.3	10	300	265	230	—	14	5	291.5	24
F 31 4	**P63**	—	11	12.8	4	140	115	95	—	M8x19	4	283	17
F 31 4	**P71**	—	14	16.3	5	160	130	110	—	M8x16	4.5	283	17
F 31 4	**P80**	—	19	21.8	6	200	165	130	—	M10x14.5	4	302.5	18
F 31 4	**P90**	—	24	27.3	8	200	165	130	—	M10x14.5	4	302.5	18
F 31 4	**P100**	—	28	31.3	8	250	215	180	—	M12x16	4.5	312.5	22
F 31 4	**P112**	—	28	31.3	8	250	215	180	—	M12x16	4.5	312.5	22

F 31...HS

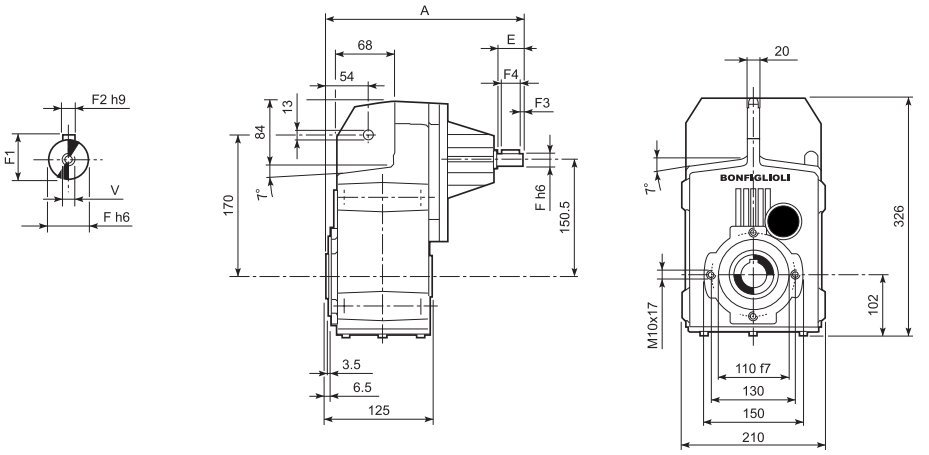

		A	E	F	F1	F2	F3	F4	V	Kg
F 31 2	**HS**	275.5	40	19	21.5	6	2.5	35	M6x16	16.7
F 31 3		275.5	40	19	21.5	6	2.5	35	M6x16	16.7
F 31 4		290	40	16	18	5	2.5	35	M6x16	16.5

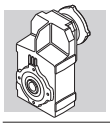

F 31...SK / SC

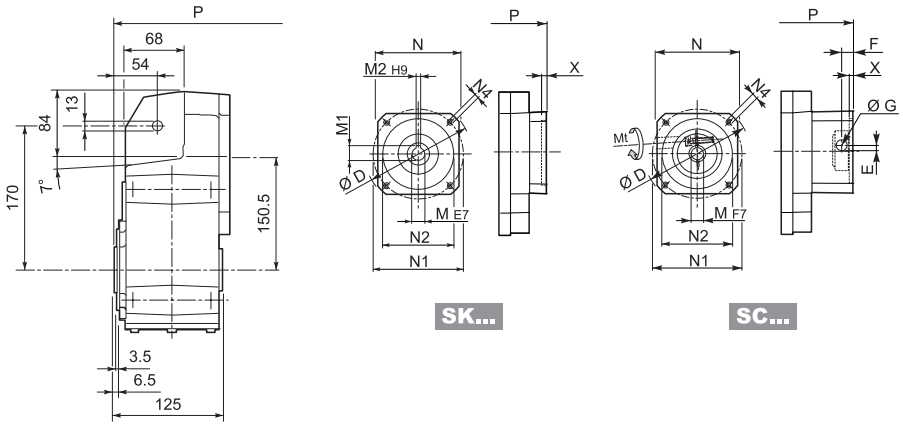

											2/3x		4x	
		D	M	M1	M2	N	N1	N2	N4	X	P	Kg	P	Kg
F 31 2/3/4	**SK 60A**	102	11	12.8	4	82	75	60	M5x10	3.5	197	16	254.5	16
F 31 2/3/4	**SK 60B**	102	14	16.3	5	82	75	60	M5x10	4	204	17	261.5	17
F 31 2/3/4	**SK 80A**	115	14	16.3	5	90	100	80	M6x12	4	204	17	261.5	17
F 31 2/3/4	**SK 80C**	120	19	21.8	6	96	100	80	M6x12	4	245	18	302.5	18
F 31 2/3/4	**SK 95A**	130	14	16.3	5	102	115	95	M8x12	4	245	18	302.5	18
F 31 2/3/4	**SK 95B**	130	19	21.8	6	102	115	95	M8x12	4	245	18	302.5	18
F 31 2/3/4	**SK 95C**	130	24	27.3	8	102	115	95	M8x12	4	245	18	302.5	18
F 31 2/3/4	**SK 110A**	150	19	21.8	6	120	130	110	M8x12	5	245	18	302.5	18
F 31 2/3/4	**SK 110B**	150	24	27.3	8	120	130	110	M8x12	5	245	18	302.5	18
F 31 2/3	**SK 130A**	188	24	27.3	8	142	165	130	M10x20	5	245	18	—	—

														2/3x		4x	
			Mt [Nm]	D	E	F	G	M	N	N1	N2	N4	X	P	Kg	P	Kg
F 31 2/3/4	**SC 60A**	M6	15	102	7	12.5	12.5	11	82	75	60	M5x10	4	224	17	281.5	17
F 31 2/3/4	**SC 60B**	M6	15	102	7	12.5	12.5	14	82	75	60	M5x10	4	224	18	281.5	18
F 31 2/3/4	**SC 80A**	M6	15	115	6	12.5	12.5	14	90	100	80	M6x12	4	224	18	281.5	18
F 31 2/3/4	**SC 80C**	M6	15	120	15.5	14.5	17.75	19	96	100	80	M6x12	4	268.5	19	326	19
F 31 2/3/4	**SC 95A**	M6	15	130	16.5	15	17.75	14	102	115	95	M8x16	4	268.5	19	326	19
F 31 2/3/4	**SC 95B**	M6	15	130	16.5	15	17.75	19	102	115	95	M8x16	4	268.5	19	326	19
F 31 2/3/4	**SC 95C**	M6	15	130	16.5	15	17.75	24	102	115	95	M8x16	4	268.5	19	326	19
F 31 2/3/4	**SC 110A**	M6	15	150	16.5	16	17.75	19	120	130	110	M8x16	5	268.5	20	326	20
F 31 2/3/4	**SC 110B**	M6	15	150	16.5	16	17.75	24	120	130	110	M8x16	5	268.5	20	326	20
F 31 2/3	**SC 130A**	M6	15	188	19	16	17.75	24	142	165	130	M10x20	5	268.5	21	—	—

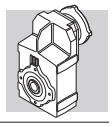

F 31

F 31...H

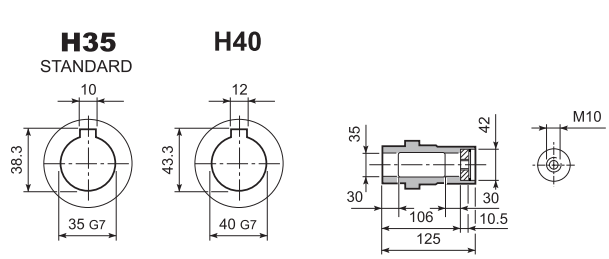

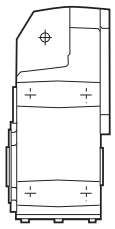

F 31...S

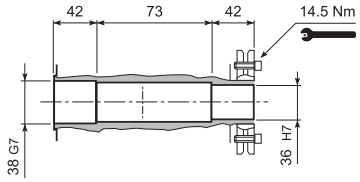

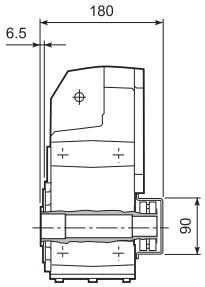

F 31...R

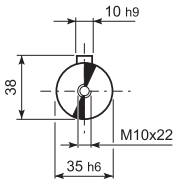

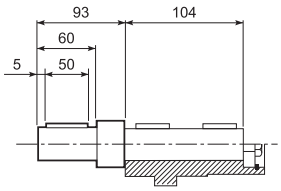

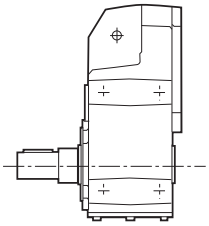

F 31...QF

	Ø
QF35	35
QF40	40

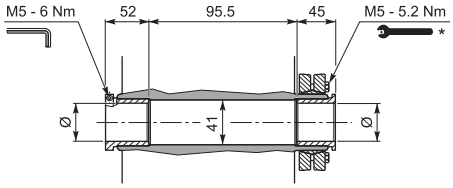

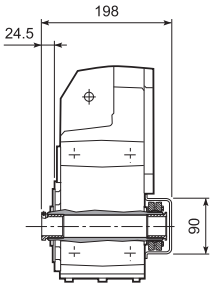

F 31...F...

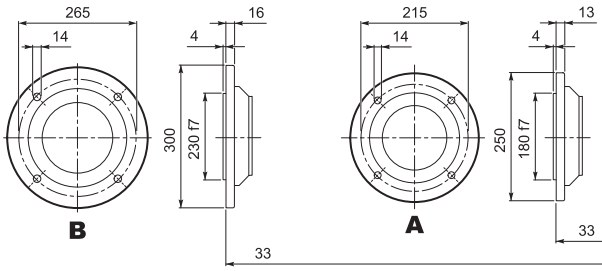

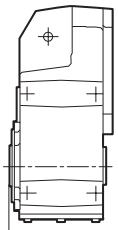

* Follow the MOUNTING INSTRUCTIONS supplied with the gearbox.

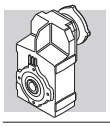

F 41...M

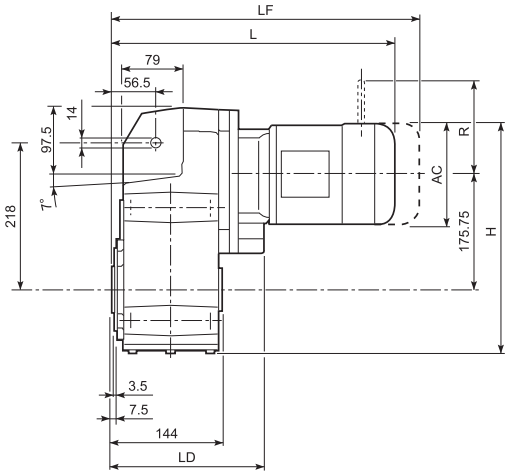

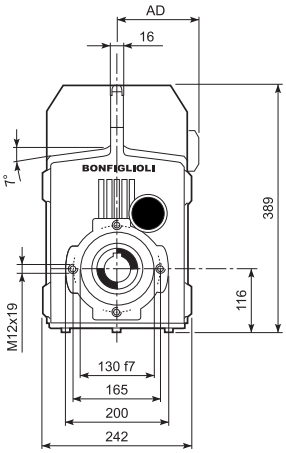

									M...FD M...FA		M...FD		M...FA	
			AC	H	L	LD	AD	Kg	LF	Kg	R	AD	R	AD
F 41 2/3	**S1**	**M1**	138	360.8	401	199.5	108	46	462	48	103	135	124	108
F 41 2/3	**S2**	**M2S**	156	369.8	430	215	119	49	500	53	129	146	134	119
F 41 2/3	**S3**	**M3S**	195	389.3	473	231	142	54	569	62	160	158	160	142
F 41 2/3	**S3**	**M3L**	195	389.3	505	231	142	62	596	69	160	158	160	142
F 41 2/3	**S4**	**M4**	258	420.8	613	—	193	96	722	114	226	210	217	193
F 41 2/3	**S4**	**M4LC**	258	420.8	648	—	193	104	747	122	226	210	217	193
F 41 4	**S05**	**M05**	231	352.3	433.5	—	95	45	499.5	46	96	122	116	95
F 41 4	**S1**	**M1**	138	360.8	462.5	—	108	47	523.5	49	103	135	124	108
F 41 4	**S2**	**M2S**	156	369.8	491.5	—	119	50	561.5	58	129	146	134	119
F 41 4	**S3**	**M3S**	195	389.3	534.5	—	142	55	630.5	62	160	158	160	142
F 41 4	**S3**	**M3L**	195	389.3	566.5	—	142	63	657.5	70	160	158	160	142

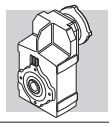

F 41...P(IEC)

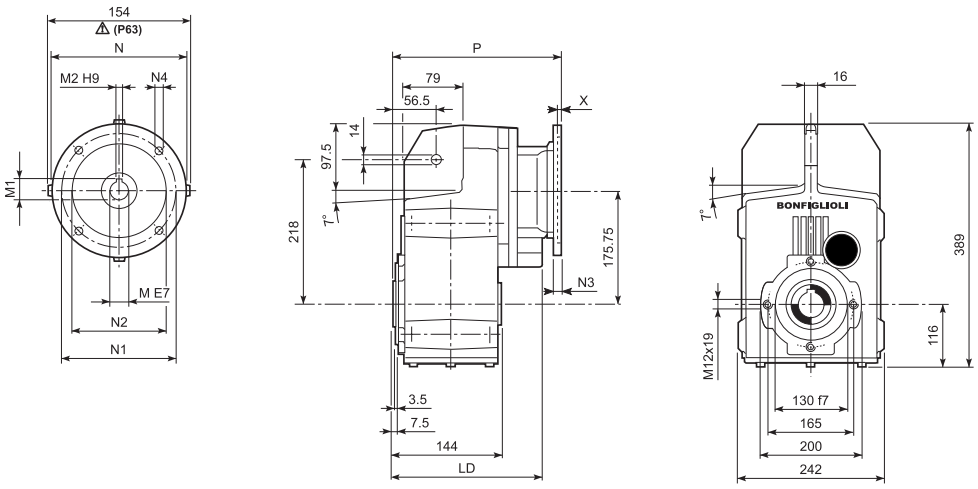

		LD	M	M1	M2	N	N1	N2	N3	N4	X	P	Kg
F 41 2/3	**P63**	215	11	12.8	4	140	115	95	—	M8x19	4	246	42
F 41 2/3	**P71**	215	14	16.3	5	160	130	110	—	M8x16	4.5	246	42
F 41 2/3	**P80**	231	19	21.8	6	200	165	130	—	M10x14.5	4	265.5	43
F 41 2/3	**P90**	231	24	27.3	8	200	165	130	—	M10x14.5	4	265.5	43
F 41 2/3	**P100**	231	28	31.3	8	250	215	180	—	M12x16	4.5	275.5	47
F 41 2/3	**P112**	231	28	31.3	8	250	215	180	—	M12x16	4.5	275.5	47
F 41 2/3	**P132**	—	38	41.3	10	300	265	230	16	14	5	312	50
F 41 4	**P63**	—	11	12.8	4	140	115	95	—	M8x19	4	307.5	44
F 41 4	**P71**	—	14	16.3	5	160	130	110	—	M8x16	4.5	307.5	44
F 41 4	**P80**	—	19	21.8	6	200	165	130	—	M10x14.5	4	327	45
F 41 4	**P90**	—	24	27.3	8	200	165	130	—	M10x14.5	4	327	45
F 41 4	**P100**	—	28	31.3	8	250	215	180	—	M12x16	4.5	337	49
F 41 4	**P112**	—	28	31.3	8	250	215	180	—	M12x16	4.5	337	49

F 41...HS

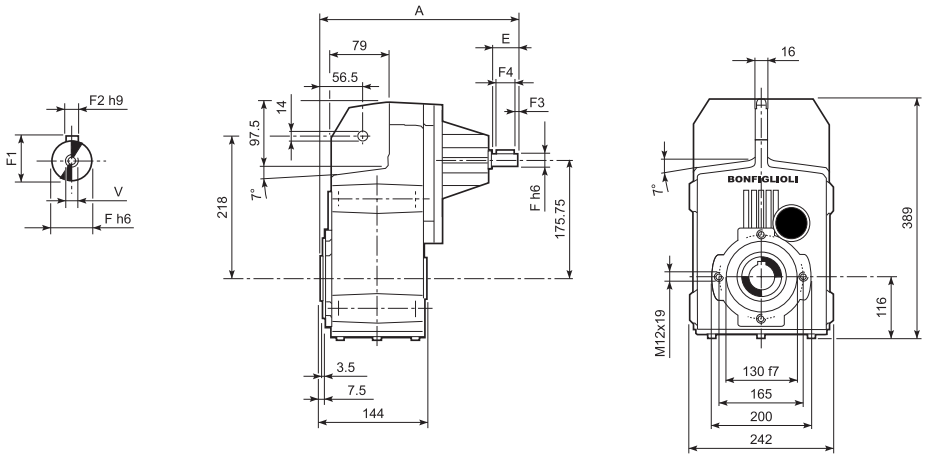

		A	E	F	F1	F2	F3	F4	V	Kg
F 41 2	**HS**	335.5	50	24	27	8	2.5	45	M8x19	44.9
F 41 3		335.5	50	24	27	8	2.5	45	M8x19	46.4
F 41 4		357.5	40	19	21.5	6	2.5	35	M6x16	43.5

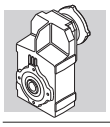

F 41...SK / SC

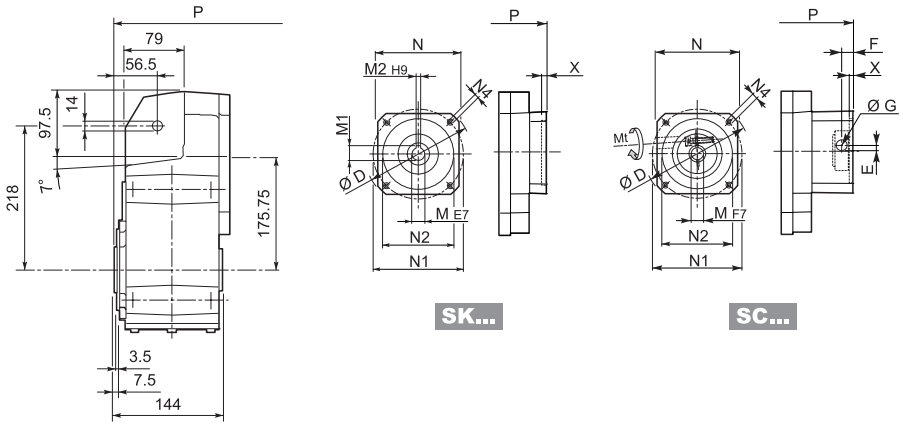

											2/3x		4x	
		D	M	M1	M2	N	N1	N2	N4	X	P	Kg	P	Kg
F 41 4	**SK 60A**	102	11	12.8	4	82	75	60	M5x10	3.5	—	—	279	43
F 41 4	**SK 60B**	102	14	16.3	5	82	75	60	M5x10	4	—	—	286	44
F 41 4	**SK 80A**	115	14	16.3	5	90	100	80	M6x12	4	—	—	286	44
F 41 2/3	**SK 80B**	120	14	16.3	5	96	100	80	M6x12	4	265.5	43	—	—
F 41 2/3/4	**SK 80C**	120	19	21.8	6	96	100	80	M6x12	4	265.5	43	327	45
F 41 2/3/4	**SK 95A**	130	14	16.3	5	102	115	95	M8x12	4	265.5	43	327	45
F 41 2/3/4	**SK 95B**	130	19	21.8	6	102	115	95	M8x12	4	265.5	43	327	45
F 41 2/3/4	**SK 95C**	130	24	27.3	8	102	115	95	M8x12	4	265.5	43	327	45
F 41 2/3/4	**SK 110A**	150	19	21.8	6	120	130	110	M8x12	5	265.5	43	327	45
F 41 2/3/4	**SK 110B**	150	24	27.3	8	120	130	110	M8x12	5	265.5	43	327	45
F 41 2/3	**SK 130A**	188	24	27.3	8	142	165	130	M10x20	5	265.5	45	—	—
F 41 2/3	**SK 130B**	189	32	35.3	10	160	165	130	M10x20	5	312	47	—	—
F 41 2/3	**SK 180A**	240	32	35.3	10	192	215	180	M12x19	5	312	47	—	—
F 41 2/3	**SK 180B**	240	38	41.3	10	192	215	180	M12x19	5	312	47	—	—

														2/3x		4x	
			Mt [Nm]	D	E	F	G	M	N	N1	N2	N4	X	P	Kg	P	Kg
F 41 4	**SC 60A**	M6	15	102	7	12.5	12.5	11	82	75	60	M5x10	4	—	—	306	44
F 41 4	**SC 60B**	M6	15	102	7	12.5	12.5	14	82	75	60	M5x10	4	—	—	306	45
F 41 4	**SC 80A**	M6	15	115	6	12.5	12.5	14	90	100	80	M6x12	4	—	—	306	45
F 41 2/3	**SC 80B**	M6	15	120	15.5	14.5	17.75	14	96	100	80	M6x12	4	289	44	—	—
F 41 2/3/4	**SC 80C**	M6	15	120	15.5	14.5	17.75	19	96	100	80	M6x12	4	289	44	350.5	46
F 41 2/3/4	**SC 95A**	M6	15	130	16.5	15	17.75	14	102	115	95	M8x16	4	289	44	350.5	46
F 41 2/3/4	**SC 95B**	M6	15	130	16.5	15	17.75	19	102	115	95	M8x16	4	289	44	350.5	46
F 41 2/3/4	**SC 95C**	M6	15	130	16.5	15	17.75	24	102	115	95	M8x16	4	289	44	350.5	46
F 41 2/3/4	**SC 110A**	M6	15	150	16.5	16	17.75	19	120	130	110	M8x16	5	289	45	350.5	47
F 41 2/3/4	**SC 110B**	M6	15	150	16.5	16	17.75	24	120	130	110	M8x16	5	289	45	350.5	47
F 41 2/3	**SC 130A**	M6	15	188	19	16	17.75	24	142	165	130	M10x20	5	289	46	—	—
F 41 2/3	**SC 130B**	M8	36	189	20	17	17.75	32	160	165	130	M10x20	5	335	50	—	—
F 41 2/3	**SC 180A**	M8	36	240	20	17.5	17.75	32	192	215	180	M12x24	5	339	50	—	—
F 41 2/3	**SC 180B**	M8	36	240	20	17.5	17.75	38	192	215	180	M12x24	5	339	50	—	—

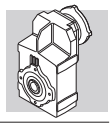

F 41

F 41...H

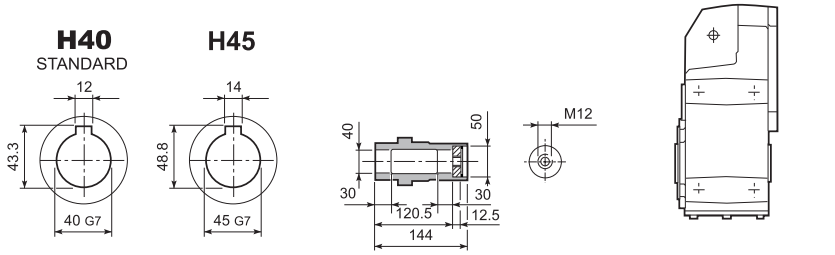

F 41...S

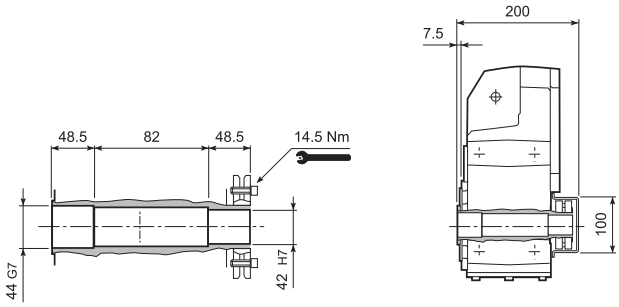

F 41...R

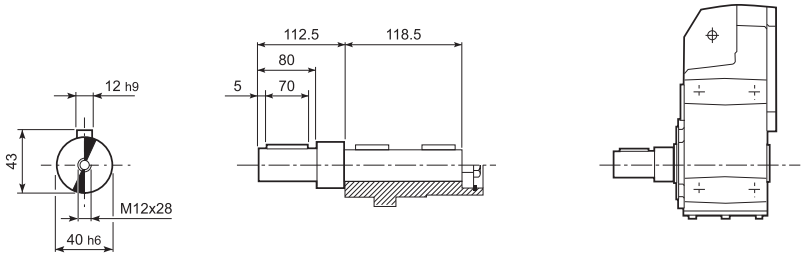

F 41...QF

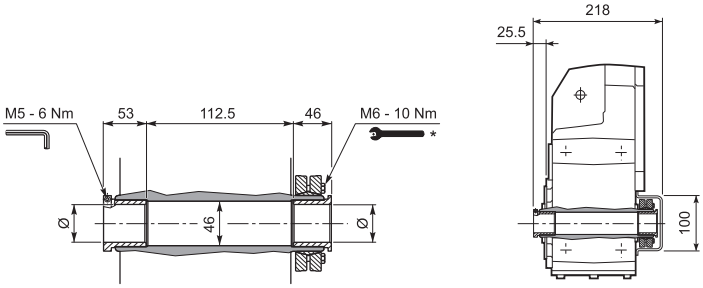

	Ø
QF42	42
QF45	45

$M_{n2\ max}$ [Nm]	
F 41 QF42	850
F 41 QF45	1000

F 41...F...

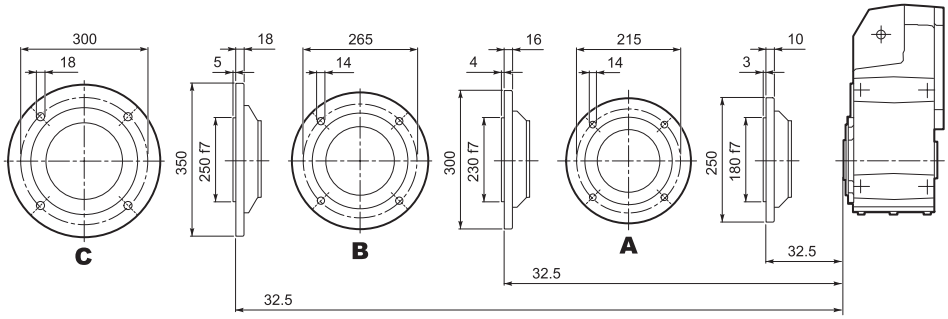

* Follow the MOUNTING INSTRUCTIONS supplied with the gearbox.

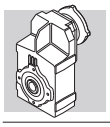

F 51...M

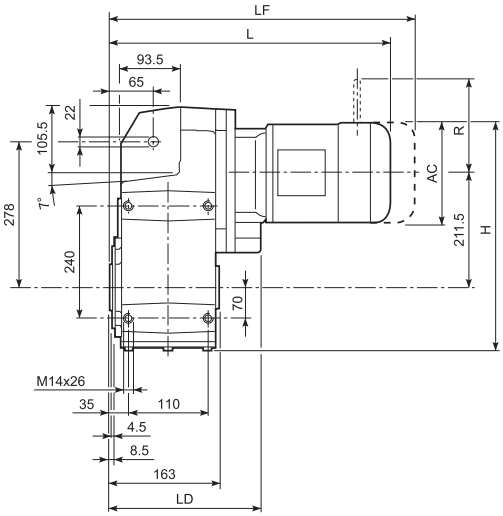

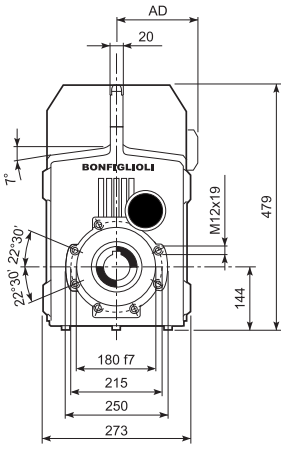

									M...FD M...FA		M...FD		M...FA	
			AC	H	L	LD	AD	Kg	LF	Kg	R	AD	R	AD
F 51 2/3	**S1**	**M1**	138	424	423	—	108	73	484	76	103	135	124	108
F 51 2/3	**S2**	**M2S**	156	433	452	238	119	73	522	76	129	146	134	119
F 51 2/3	**S3**	**M3S**	195	452.5	495	253	142	77	591	85	160	158	160	142
F 51 2/3	**S3**	**M3L**	195	452.5	527	253	142	85	618	92	160	158	160	142
F 51 2/3	**S4**	**M4**	258	484	635	238	193	119	744	137	226	210	217	193
F 51 2/3	**S4**	**M4LC**	258	484	670	238	193	127	769	145	226	210	217	193
F 51 2/3	**S5**	**M5S**	310	510	721.5	—	245	153	861.5	188	266	245	247	245
F 51 2/3	**S5**	**M5L**	310	510	765.5	—	245	169	905.5	204	266	245	247	245
F 51 4	**S1**	**M1**	138	424	494.5	—	108	75	555.5	78	103	135	124	108
F 51 4	**S2**	**M2S**	156	433	523.5	—	119	79	593.5	83	129	146	134	119
F 51 4	**S3**	**M3S**	195	452.5	566.5	—	142	84	662.5	91	160	158	160	142
F 51 4	**S3**	**M3L**	195	452.5	598.5	—	142	91	689.5	98	160	158	160	142

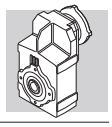

F 51...P(IEC)

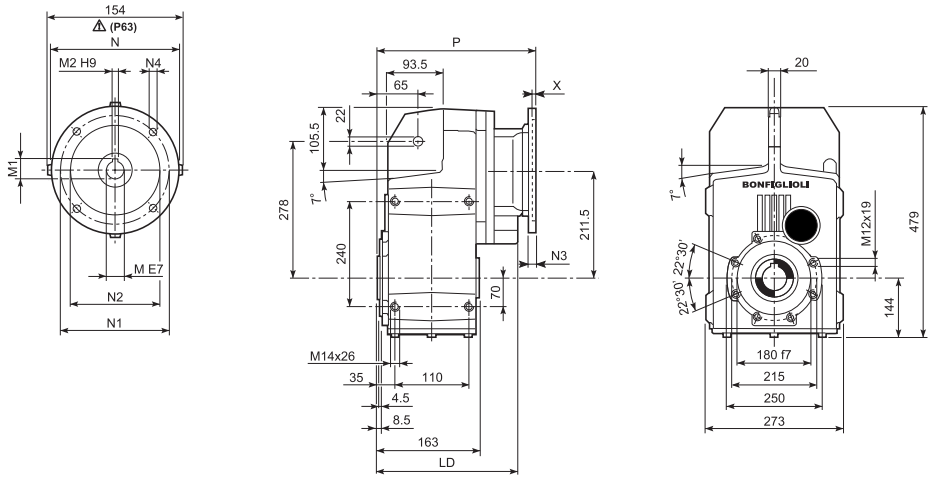

		LD	M	M1	M2	N	N1	N2	N3	N4	X	P	Kg
F 51 2/3	**P63**	238	11	12.8	4	140	115	95	—	M8x19	4	268	65
F 51 2/3	**P71**	238	14	16.3	5	160	130	110	—	M8x16	4.5	268	65
F 51 2/3	**P80**	253	19	21.8	6	200	165	130	—	M10x14.5	4	287.5	67
F 51 2/3	**P90**	253	24	27.3	8	200	165	130	—	M10x14.5	4	287.5	67
F 51 2/3	**P100**	238	28	31.3	8	250	215	180	—	M12x16	4.5	297.5	71
F 51 2/3	**P112**	238	28	31.3	8	250	215	180	—	M12x16	4.5	297.5	71
F 51 2/3	**P132**	238	38	41.3	10	300	265	230	16	14	5	334	74
F 51 2/3	**P160**	—	42	45.3	12	350	300	250	23	18	5.5	384.5	78
F 51 2/3	**P180**	—	48	51.8	14	350	300	250	23	18	5.5	384.5	78
F 51 4	**P63**	—	11	12.8	4	140	115	95	—	M8x19	4	339.5	70
F 51 4	**P71**	—	14	16.3	5	160	130	110	—	M8x16	4.5	339.5	70
F 51 4	**P80**	—	19	21.8	6	200	165	130	—	M10x14.5	4	359	71
F 51 4	**P90**	—	24	27.3	8	200	165	130	—	M10x14.5	4	359	71
F 51 4	**P100**	—	28	31.3	8	250	215	180	—	M12x16	4.5	369	75
F 51 4	**P112**	—	28	31.3	8	250	215	180	—	M12x16	4.5	369	75

F 51...HS

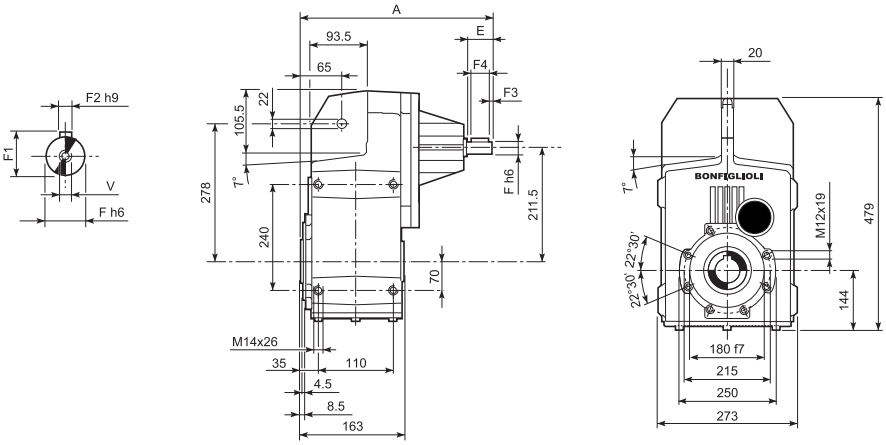

		A	E	F	F1	F2	F3	F4	V	Kg
F 51 2		357.5	50	24	27	8	2.5	45	M8x19	65
F 51 3	**HS**	357.5	50	24	27	8	2.5	45	M8x19	68
F 51 4		389.5	40	19	21.5	6	2.5	35	M6x16	70

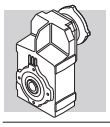

F 51...SK / SC

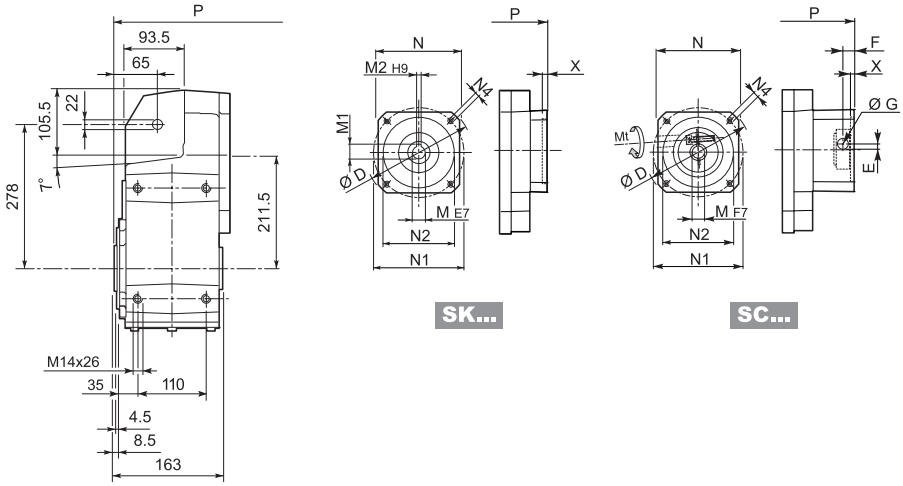

											2/3x		4x	
		D	M	M1	M2	N	N1	N2	N4	X	P	Kg	P	Kg
F 51 2/3	**SK 80B**	120	14	16.3	5	96	100	80	M6x12	4	287.5	67	—	—
F 51 2/3/4	**SK 80C**	120	19	21.8	6	96	100	80	M6x12	4	287.5	67	359	71
F 51 2/3/4	**SK 95A**	130	14	16.3	5	102	115	95	M8x12	4	287.5	67	359	71
F 51 2/3/4	**SK 95B**	130	19	21.8	6	102	115	95	M8x12	4	287.5	67	359	71
F 51 2/3/4	**SK 95C**	130	24	27.3	8	102	115	95	M8x12	4	287.5	67	359	71
F 51 2/3/4	**SK 110A**	150	19	21.8	6	120	130	110	M8x12	5	287.5	67	359	71
F 51 2/3/4	**SK 110B**	150	24	27.3	8	120	130	110	M8x12	5	287.5	67	359	71
F 51 2/3/4	**SK 130A**	188	24	27.3	8	142	165	130	M10x20	5	287.5	69	359	73
F 51 2/3	**SK 130B**	189	32	35.3	10	160	165	130	M10x20	5	334	75	—	—
F 51 2/3	**SK 180A**	240	32	35.3	10	192	215	180	M12x19	5	334	75	—	—
F 51 2/3	**SK 180B**	240	38	41.3	10	192	215	180	M12x19	5	334	75	—	—

														2/3x		4x	
			Mt [Nm]	D	E	F	G	M	N	N1	N2	N4	X	P	Kg	P	Kg
F 51 2/3	**SC 80B**	M6	15	120	15.5	14.5	17.75	14	96	100	80	M6x12	4	311	70	—	—
F 51 2/3/4	**SC 80C**	M6	15	120	15.5	14.5	17.75	19	96	100	80	M6x12	4	311	70	382.5	74
F 51 2/3/4	**SC 95A**	M6	15	130	16.5	15	17.75	14	102	115	95	M8x16	4	311	70	382.5	74
F 51 2/3/4	**SC 95B**	M6	15	130	16.5	15	17.75	19	102	115	95	M8x16	4	311	70	382.5	74
F 51 2/3/4	**SC 95C**	M6	15	130	16.5	15	17.75	24	102	115	95	M8x16	4	311	70	382.5	74
F 51 2/3/4	**SC 110A**	M6	15	150	16.5	16	17.75	19	120	130	110	M8x16	5	311	71	382.5	75
F 51 2/3/4	**SC 110B**	M6	15	150	16.5	16	17.75	24	120	130	110	M8x16	5	311	71	382.5	75
F 51 2/3/4	**SC 130A**	M6	15	188	19	16	17.75	24	142	165	130	M10x20	5	311	72	382.5	76
F 51 2/3	**SC 130B**	M8	36	189	20	17	17.75	32	160	165	130	M10x20	5	357	75	—	—
F 51 2/3	**SC 180A**	M8	36	240	20	17.5	17.75	32	192	215	180	M12x24	5	361	75	—	—
F 51 2/3	**SC 180B**	M8	36	240	20	17.5	17.75	38	192	215	180	M12x24	5	361	75	—	—

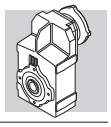

F 51

F 51...H

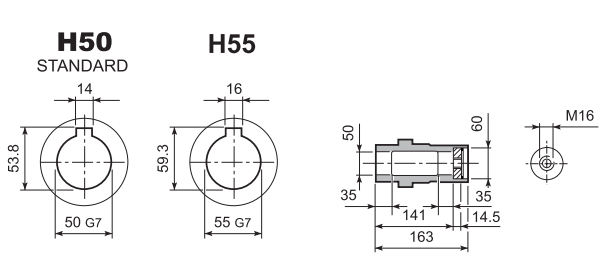

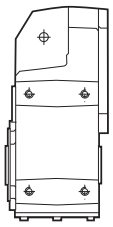

F 51...S

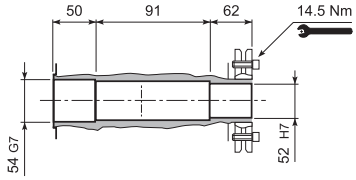

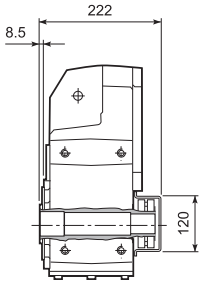

F 51...R

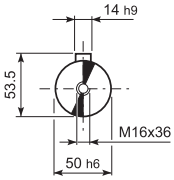

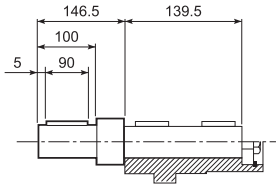

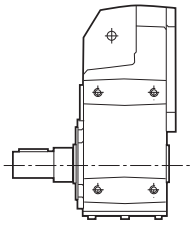

F 51...QF

	Ø
QF50	50
QF55	55

	$M_{n2\ max}$ [Nm]
F 51 QF50	1750

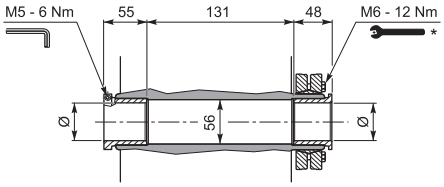

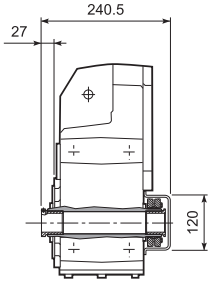

F 51...F...

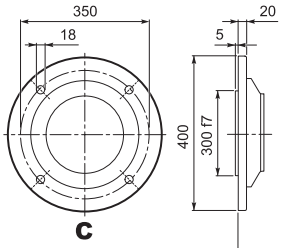

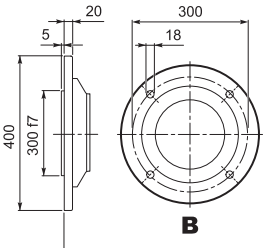

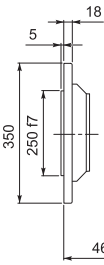

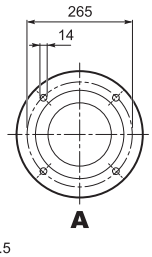

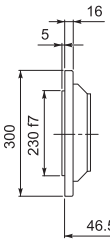

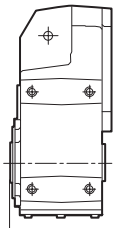

46.5
46.5
46.5

* Follow the MOUNTING INSTRUCTIONS supplied with the gearbox.

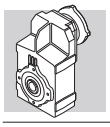

F 60...M

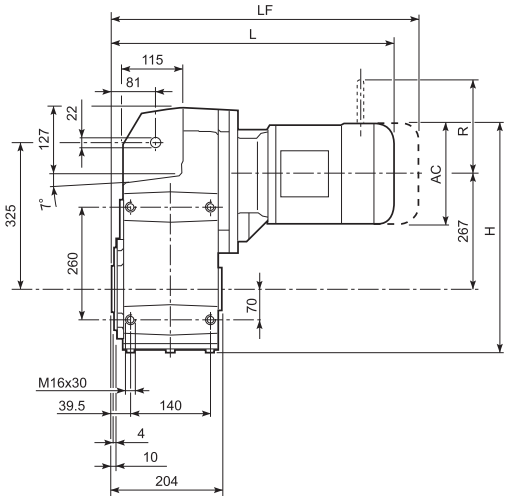

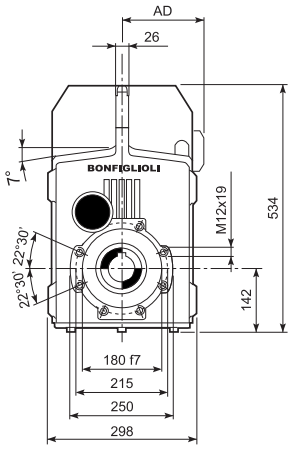

								M...FD M...FA		M...FD		M...FA	
			AC	H	L	AD	Kg	LF	Kg	R	AD	R	AD
F 60 3	**S2**	**M2S**	156	487	486.5	119	114	556.5	121	129	146	134	119
F 60 3	**S3**	**M3S**	195	506.5	529.5	142	114	625.5	122	160	158	160	142
F 60 3	**S3**	**M3L**	195	506.5	561.5	142	122	652.5	129	160	158	160	142
F 60 3	**S4**	**M4**	258	538	669.5	193	156	777.5	174	226	210	217	193
F 60 3	**S4**	**M4LC**	258	538	704.5	193	164	802.5	182	226	210	217	193
F 60 3	**S5**	**M5S**	310	564	756	245	184	896	214	266	245	247	245
F 60 3	**S5**	**M5L**	310	564	800	245	200	940	230	266	245	247	245
F 60 4	**S1**	**M1**	138	478	528	108	113	589	116	103	135	124	108
F 60 4	**S2**	**M2S**	156	487	557	119	117	627	121	129	146	134	119
F 60 4	**S3**	**M3S**	195	506.5	600	142	122	696	129	160	158	160	142
F 60 4	**S3**	**M3L**	195	506.5	632	142	129	723	136	160	158	160	142

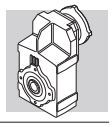

F 60...P(IEC)

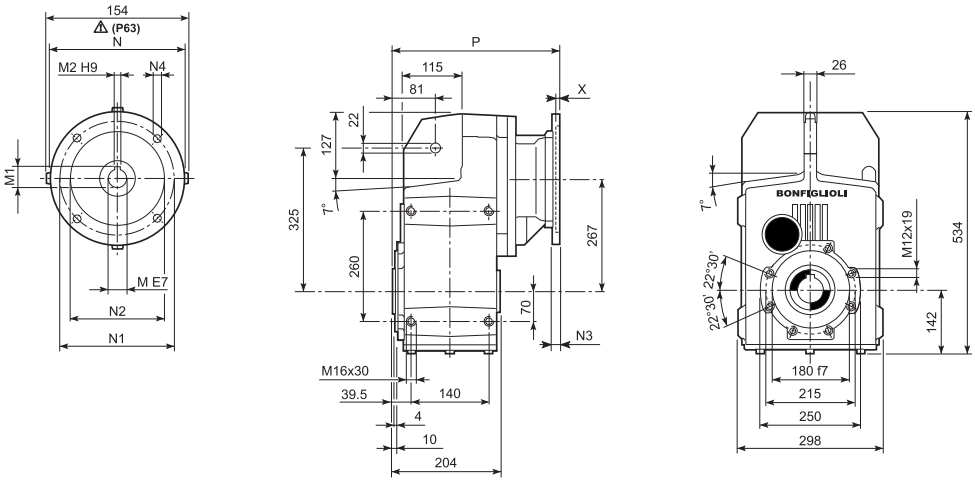

		M	M1	M2	N	N1	N2	N3	N4	X	P	Kg
F 60 3	**P63**	11	12.8	4	140	115	95	—	M8x19	4	302.5	103
F 60 3	**P71**	14	16.3	5	160	130	110	—	M8x16	4.5	302.5	103
F 60 3	**P80**	19	21.8	6	200	165	130	—	M10x14.5	4	322	104
F 60 3	**P90**	24	27.3	8	200	165	130	—	M10x14.5	4	322	104
F 60 3	**P100**	28	31.3	8	250	215	180	—	M12x16	4.5	331	108
F 60 3	**P112**	28	31.3	8	250	215	180	—	M12x16	4.5	331	108
F 60 3	**P132**	38	41.3	10	300	265	230	16	14	5	367.5	111
F 60 3	**P160**	42	45.3	12	350	300	250	23	18	5.5	419	116
F 60 3	**P180**	48	51.8	14	350	300	250	23	18	5.5	419	116
F 60 4	**P63**	11	12.8	4	140	115	95	—	M8x19	4	373	108
F 60 4	**P71**	14	16.3	5	160	130	110	—	M8x16	4.5	373	108
F 60 4	**P80**	19	21.8	6	200	165	130	—	M10x14.5	4	392.5	110
F 60 4	**P90**	24	27.3	8	200	165	130	—	M10x14.5	4	392.5	110
F 60 4	**P100**	28	31.3	8	250	215	180	—	M12x16	4.5	402.5	114
F 60 4	**P112**	28	31.3	8	250	215	180	—	M12x16	4.5	402.5	114

F 60...HS

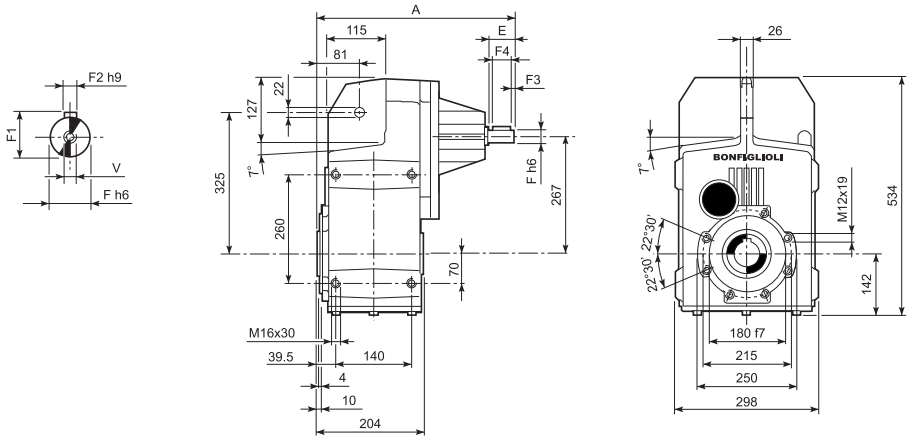

		A	E	F	F1	F2	F3	F4	V	Kg
F 60 3	**HS**	419	60	28	31	8	5.0	50	M10x22	108
F 60 4		462.5	50	24	27	8	2.5	45	M8x19	105

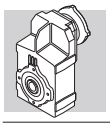

F 60...SK / SC

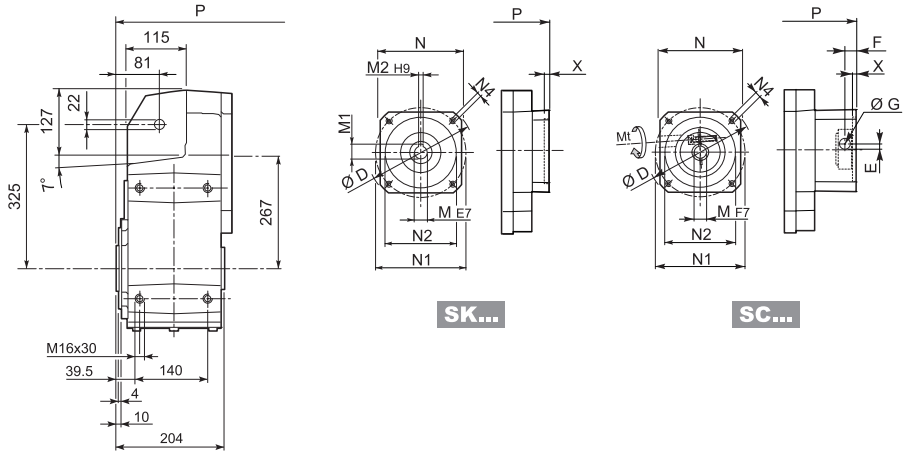

											2/3x		4x	
		D	M	M1	M2	N	N1	N2	N4	X	P	Kg	P	Kg
F 60 4	**SK 80B**	120	14	16.3	5	96	100	80	M6x12	4	—	—	392.5	109
F 60 3/4	**SK 80C**	120	19	21.8	6	96	100	80	M6x12	4	322	106	392.5	112
F 60 3/4	**SK 95A**	130	14	16.3	5	102	115	95	M8x12	4	322	106	392.5	112
F 60 3/4	**SK 95B**	130	19	21.8	6	102	115	95	M8x12	4	322	106	392.5	112
F 60 3/4	**SK 95C**	130	24	27.3	8	102	115	95	M8x12	4	322	106	392.5	112
F 60 3/4	**SK 110A**	140	19	21.8	6	120	130	110	M8x12	5	322	106	392.5	112
F 60 3/4	**SK 110B**	140	24	27.3	8	120	130	110	M8x12	5	322	106	392.5	112
F 60 3/4	**SK 130A**	188	24	27.3	8	142	165	130	M10x20	5	322	108	392.5	112
F 60 3	**SK 130B**	189	32	35.3	10	160	165	130	M10x20	5	368.5	109	—	—
F 60 3	**SK 180A**	240	32	35.3	10	192	215	180	M12x19	5	368.5	109	—	—
F 60 3	**SK 180B**	240	38	41.3	10	192	215	180	M12x19	5	368.5	109	—	—

													2/3x		4x	
			Mt [Nm]	D	E	F	G	M	N	N1	N2	N4	X	P	Kg	P	Kg
F 60 4	**SC 80B**	M6	15	120	15.5	14.5	17.75	14	96	100	80	M6x12	4	—	—	416	113
F 60 3/4	**SC 80C**	M6	15	120	15.5	14.5	17.75	19	96	100	80	M6x12	4	345.5	107	416	113
F 60 3/4	**SC 95A**	M6	15	130	16.5	15	17.75	14	102	115	95	M8x16	4	345.5	107	416	113
F 60 3/4	**SC 95B**	M6	15	130	16.5	15	17.75	19	102	115	95	M8x16	4	345.5	107	416	113
F 60 3/4	**SC 95C**	M6	15	130	16.5	15	17.75	24	102	115	95	M8x16	4	345.5	107	416	113
F 60 3/4	**SC 110A**	M6	15	140	16.5	16	17.75	19	120	130	110	M8x16	5	345.5	108	416	113
F 60 3/4	**SC 110B**	M6	15	140	16.5	16	17.75	24	120	130	110	M8x16	5	345.5	108	416	113
F 60 3/4	**SC 130A**	M6	15	188	19	16	17.75	24	142	165	130	M10x20	5	345.5	109	416	115
F 60 3	**SC 130B**	M8	36	189	20	17	17.75	32	160	165	130	M10x20	5	390.5	112	—	—
F 60 3	**SC 180A**	M8	36	240	20	17.5	17.75	32	192	215	180	M12x24	5	394.5	112	—	—
F 60 3	**SC 180B**	M8	36	240	20	17.5	17.75	38	192	215	180	M12x24	5	394.5	112	—	—

F 60

F 60...H

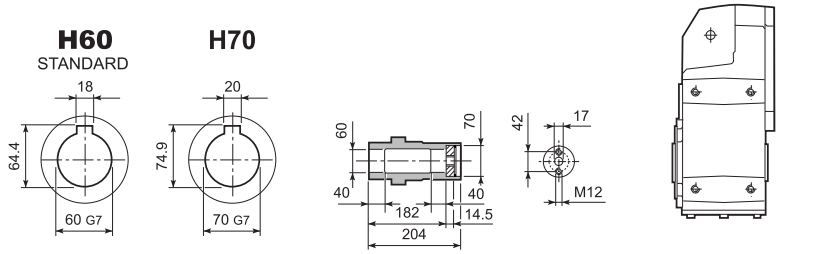

F 60...S

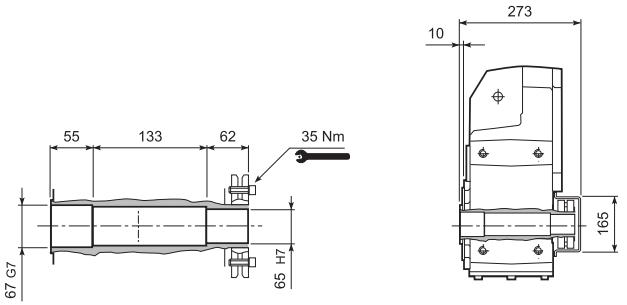

F 60...R

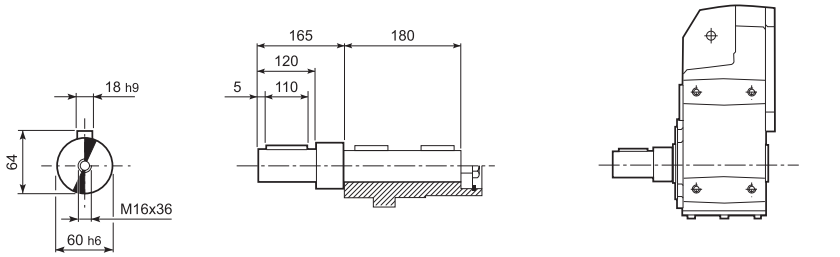

F 60...QF

	Ø
QF60	60
QF65	65
QF70	70

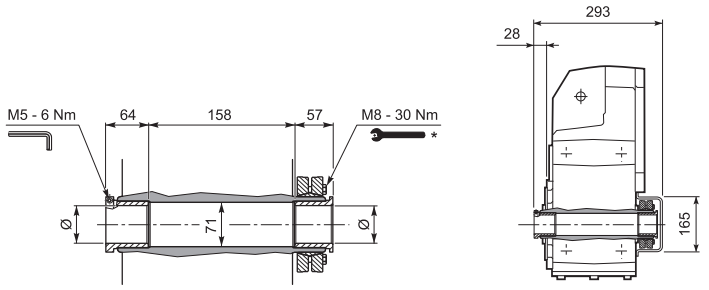

F 60...F...

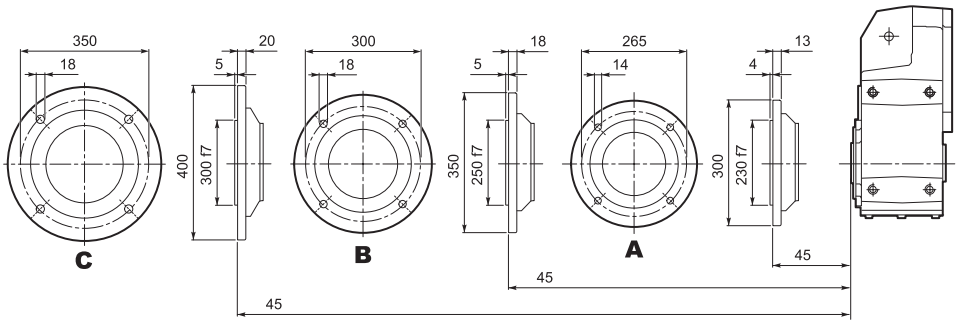

* Follow the MOUNTING INSTRUCTIONS supplied with the gearbox.

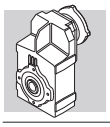

F 70...M

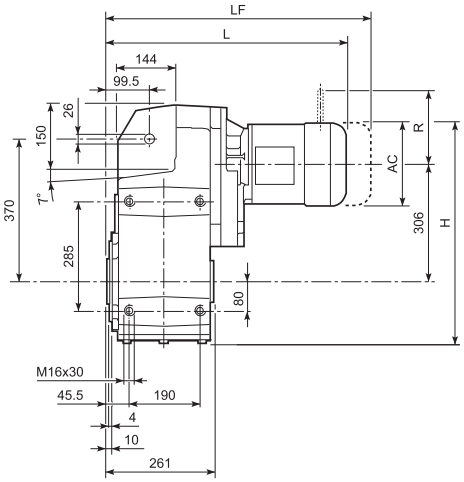

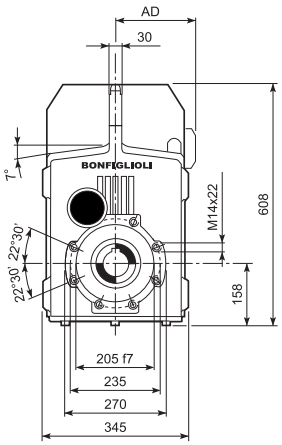

								M...FD M...FA		M...FD		M...FA	
			AC	H	L	AD	Kg	LF	Kg	R	AD	R	AD
F 70 3	**S2**	**M2S**	156	542	552	119	173	622	177	129	146	134	119
F 70 3	**S3**	**M3S**	195	561.5	595	142	178	691	186	160	158	160	142
F 70 3	**S3**	**M3L**	195	561.5	627	142	186	718	193	160	158	160	142
F 70 3	**S4**	**M4**	258	593	735	193	220	844	238	226	210	217	193
F 70 3	**S4**	**M4LC**	258	593	770	193	228	869	246	226	210	217	193
F 70 3	**S5**	**M5S**	310	619	821.5	245	248	961.5	278	266	245	247	245
F 70 3	**S5**	**M5L**	310	619	865.5	245	264	1005.5	294	266	245	247	245
F 70 4	**S1**	**M1**	138	533	574	108	173	635	176	103	135	124	108
F 70 4	**S2**	**M2S**	156	542	603	119	177	673	180	129	146	134	119
F 70 4	**S3**	**M3S**	195	561.5	646	142	181	742	189	160	158	160	142
F 70 4	**S3**	**M3L**	195	561.5	678	142	189	769	196	160	158	160	142
F 70 4	**S4**	**M4**	258	593	786	193	223	895	241	226	210	217	193
F 70 4	**S4**	**M4LC**	258	593	821	193	231	920	249	226	210	217	193

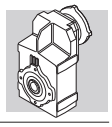

F 70...P(IEC)

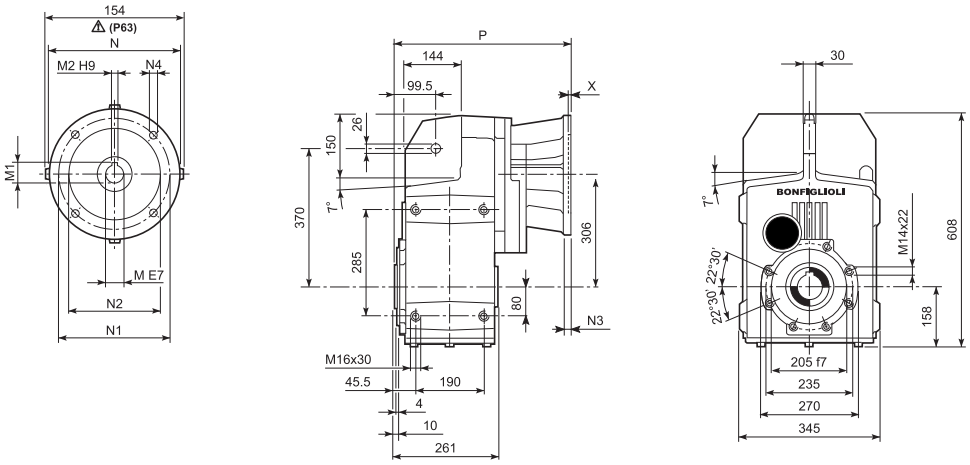

		M	M1	M2	N	N1	N2	N3	N4	X	P	Kg
F 70 3	**P80**	19	21.8	6	200	165	130	—	M10x14.5	4	387.5	167
F 70 3	**P90**	24	27.3	8	200	165	130	—	M10x14.5	4	387.5	167
F 70 3	**P100**	28	31.3	8	250	215	180	—	M12x16	4.5	397.5	171
F 70 3	**P112**	28	31.3	8	250	215	180	—	M12x16	4.5	397.5	171
F 70 3	**P132**	38	41.3	10	300	265	230	16	14	5	434	173
F 70 3	**P160**	42	45.3	12	350	300	250	23	18	6	489.5	185
F 70 3	**P180**	48	51.8	14	350	300	250	23	18	6	489.5	185
F 70 3	**P200**	55	59.3	16	400	350	300	—	M16x25	7	514.5	206
F 70 4	**P63**	11	12.8	4	140	115	95	—	M8x19	4	419	168
F 70 4	**P71**	14	16.3	5	160	130	110	—	M8x16	4.5	419	168
F 70 4	**P80**	19	21.8	6	200	165	130	—	M10x14.5	4	438.5	170
F 70 4	**P90**	24	27.3	8	200	165	130	—	M10x14.5	4	438.5	170
F 70 4	**P100**	28	31.3	8	250	215	180	—	M12x16	4.5	446.5	174
F 70 4	**P112**	28	31.3	8	250	215	180	—	M12x16	4.5	446.5	174
F 70 4	**P132**	38	41.3	10	300	265	230	16	14	5	482	176

F 70...HS

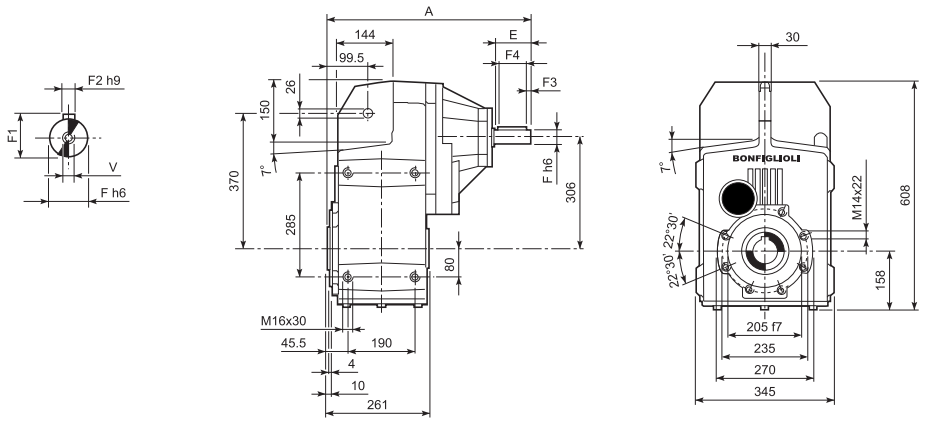

		A	E	F	F1	F2	F3	F4	V	Kg
F 70 3	**HS**	572	110	42	45	12	10	90	M12x28	186
F 70 4		508.5	50	24	27	8	2.5	45	M8x19	174

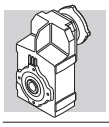

F 70

F 70...H

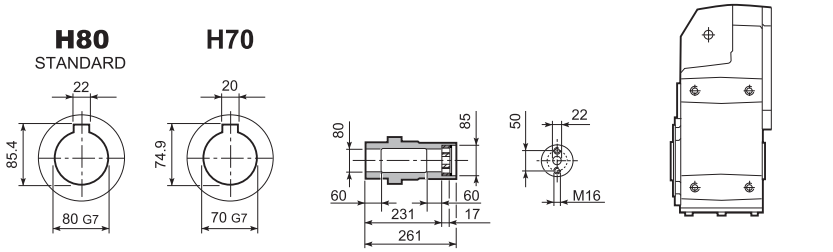

F 70...S

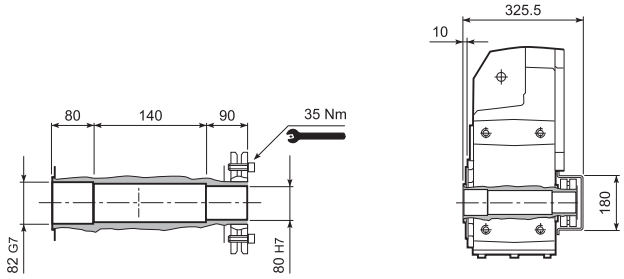

F 70...R

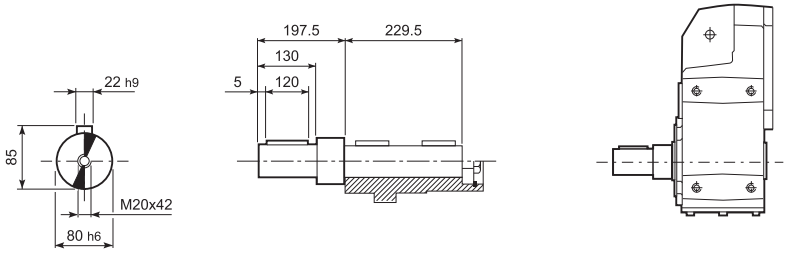

F 70...F...

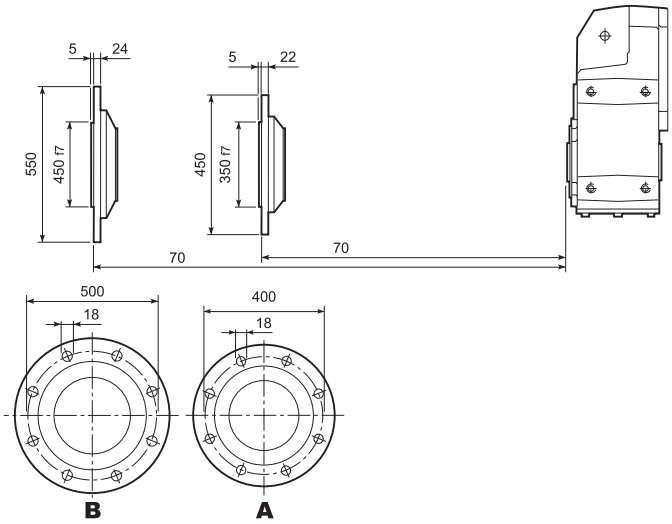

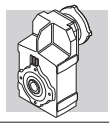

F 80...M

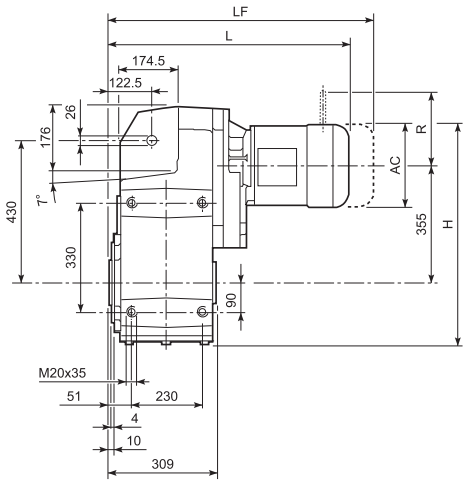

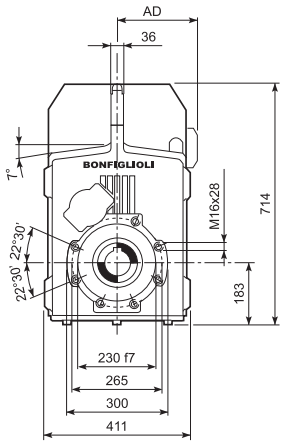

								M...FD M...FA		M...FD		M...FA	
			AC	H	L	AD	Kg	LF	Kg	R	AD	R	AD
F 80 3	**S3**	**M3S**	195	635.5	653	142	266	749	273	160	158	160	142
F 80 3	**S3**	**M3L**	195	635.5	685	142	273	776	280	160	158	160	142
F 80 3	**S4**	**M4**	258	667	793	193	307	902	325	226	210	217	193
F 80 3	**S4**	**M4LC**	258	667	828	193	315	927	333	226	210	217	193
F 80 3	**S5**	**M5S**	310	693	879.5	245	335	1019.5	365	266	245	247	245
F 80 3	**S5**	**M5L**	310	693	923.5	245	351	1063.5	381	266	245	247	245
F 80 4	**S1**	**M1**	138	607	644	108	262	705	265	103	135	124	108
F 80 4	**S2**	**M2S**	156	616	673	119	266	743	269	129	146	134	119
F 80 4	**S3**	**M3S**	195	635.5	716	142	271	812	278	160	158	160	142
F 80 4	**S3**	**M3L**	195	635.5	748	142	278	839	285	160	158	160	142
F 80 4	**S4**	**M4**	258	667	856	193	312	965	330	226	210	217	193
F 80 4	**S4**	**M4LC**	258	667	891	193	320	990	338	226	210	217	193

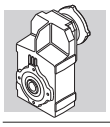

F 80...P(IEC)

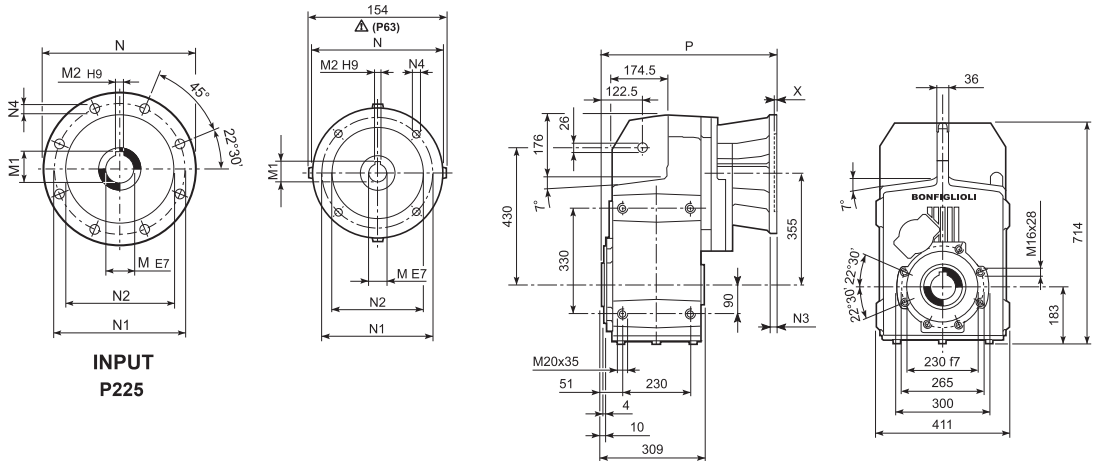

		M	M1	M2	N	N1	N2	N3	N4	X	P	Kg
F 80 3	**P80**	19	21.8	6	200	165	130	—	M10x14.5	4	445.5	255
F 80 3	**P90**	24	27.3	8	200	165	130	—	M10x14.5	4	445.5	255
F 80 3	**P100**	28	31.3	8	250	215	180	—	M12x16	4.5	455.5	259
F 80 3	**P112**	28	31.3	8	250	215	180	—	M12x16	4.5	455.5	259
F 80 3	**P132**	38	41.3	10	300	265	230	16	14	5	492	261
F 80 3	**P160**	42	45.3	12	350	300	250	23	18	6	547.5	276
F 80 3	**P180**	48	51.8	14	350	300	250	23	18	6	547.5	276
F 80 3	**P200**	55	59.3	16	400	350	300	—	M16x25	7	572.5	298
F 80 3	**P225**	60	64.4	18	450	400	350	25	18	6	618	298
F 80 4	**P63**	11	12.8	4	140	115	95	—	M8x19	4	489	258
F 80 4	**P71**	14	16.3	5	160	130	110	—	M8x16	4.5	489	258
F 80 4	**P80**	19	21.8	6	200	165	130	—	M10x14.5	4	508.5	260
F 80 4	**P90**	24	27.3	8	200	165	130	—	M10x14.5	4	508.5	260
F 80 4	**P100**	28	31.3	8	250	215	180	—	M12x16	4.5	518.5	264
F 80 4	**P112**	28	31.3	8	250	215	180	—	M12x16	4.5	518.5	264
F 80 4	**P132**	38	41.3	10	300	265	230	16	14	5	552	266

F 80...HS

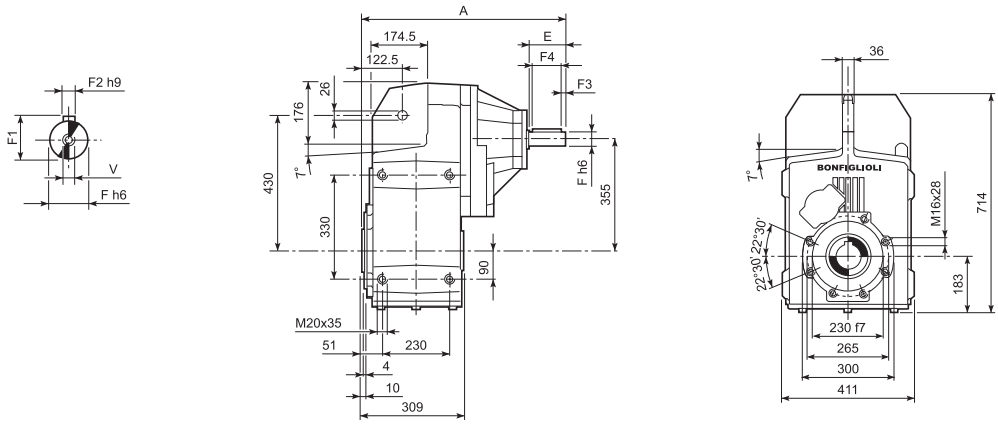

		A	E	F	F1	F2	F3	F4	V	Kg
F 80 3	**HS**	630	110	42	45	12	10	90	M12x28	273
F 80 4		575.5	50	24	27	8	2.5	45	M8x19	263

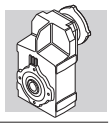

F 80

F 80...H

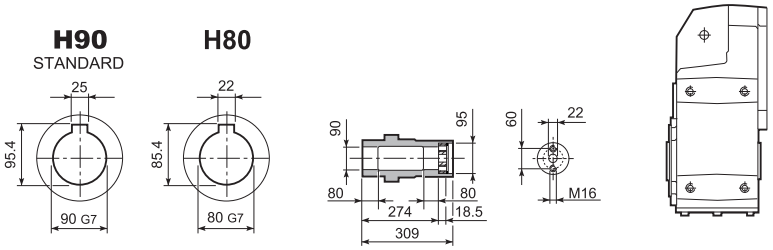

F 80...S

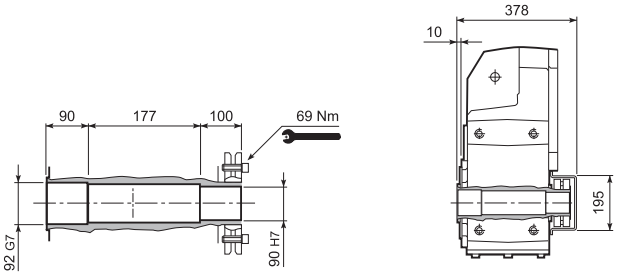

F 80...R

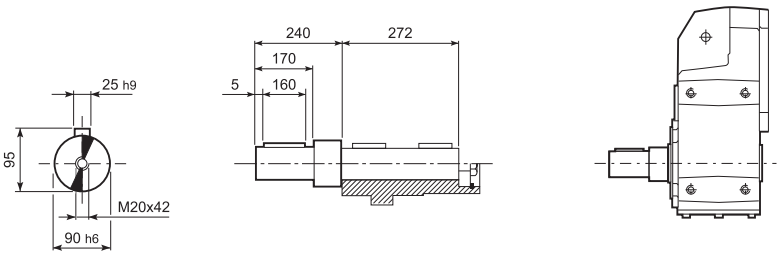

F 80...F...

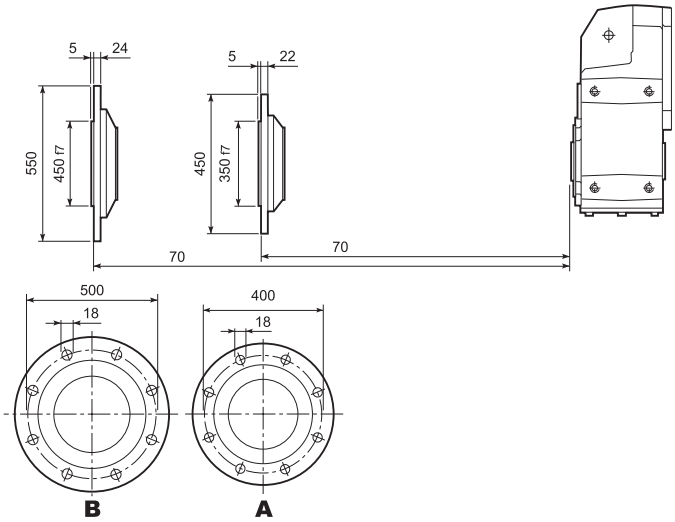

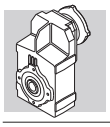

F 90...M

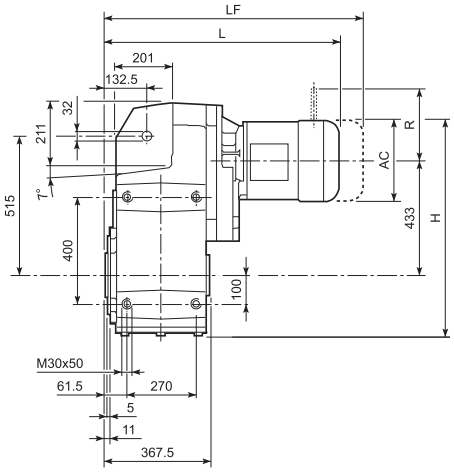

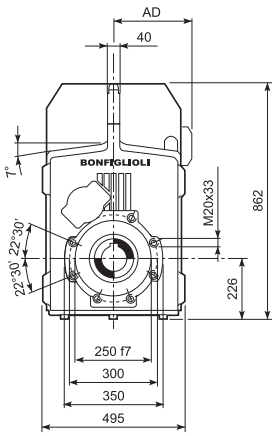

								M...FD M...FA		M...FD		M...FA	
			AC	H	L	AD	Kg	LF	Kg	R	AD	R	AD
F 90 3	**S3**	**M3S**	195	756	728	142	453	824	460	160	158	160	142
F 90 3	**S3**	**M3L**	195	756	760	142	460	851	467	160	158	160	142
F 90 3	**S4**	**M4**	258	787.5	868	193	494	977	512	226	210	217	193
F 90 3	**S5**	**M5L**	310	813.5	998.5	245	538	1138.5	568	266	245	247	245
F 90 4	**S2**	**M2S**	156	736.5	768	119	456	838	460	129	146	134	119
F 90 4	**S3**	**M3S**	195	756	811	142	460	907	468	160	158	160	142
F 90 4	**S3**	**M3L**	195	756	843	142	468	934	475	160	158	160	142
F 90 4	**S4**	**M4**	258	787.5	951	193	502	1060	520	226	210	217	193
F 90 4	**S4**	**M4LC**	258	787.5	986	193	510	1085	528	226	210	217	193

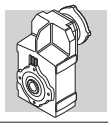

F 90...P(IEC)

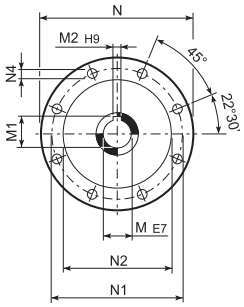

INPUT
P225...P250

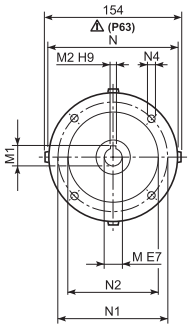

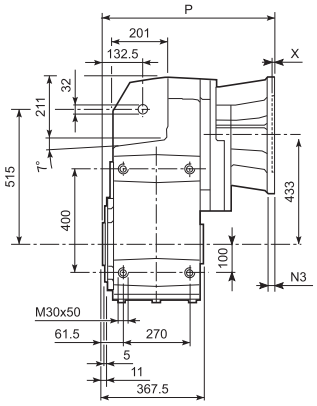

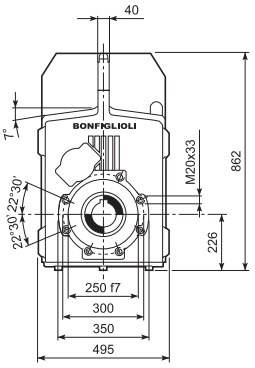

		M	M1	M2	N	N1	N2	N3	N4	X	P	Kg
F 90 3	**P80**	19	21.8	6	200	165	130	—	M10x14.5	4	520.5	442
F 90 3	**P90**	24	27.3	8	200	165	130	—	M10x14.5	4	520.5	442
F 90 3	**P100**	28	31.3	8	250	215	180	—	M12x16	4.5	530.5	446
F 90 3	**P112**	28	31.3	8	250	215	180	—	M12x16	4.5	530.5	446
F 90 3	**P132**	38	41.3	10	300	265	230	16	14	5	567	449
F 90 3	**P160**	42	45.3	12	350	300	250	23	18	6	622.5	463
F 90 3	**P180**	48	51.8	14	350	300	250	23	18	6	622.5	463
F 90 3	**P200**	55	59.3	16	400	350	300	—	M16x25	7	647.5	485
F 90 3	**P225**	60	64.4	18	450	400	350	30	18	6	693	485
F 90 3	**P250**	65	69.4	18	550	500	450	30	18	6	723	507
F 90 4	**P63**	11	12.8	4	140	115	95	—	M8x19	4	584	448
F 90 4	**P71**	14	16.3	5	160	130	110	—	M8x16	4.5	584	448
F 90 4	**P80**	19	21.8	6	200	165	130	—	M10x14.5	4	603.5	450
F 90 4	**P90**	24	27.3	8	200	165	130	—	M10x14.5	4	603.5	450
F 90 4	**P100**	28	31.3	8	250	215	180	—	M12x16	4.5	613.5	454
F 90 4	**P112**	28	31.3	8	250	215	180	—	M12x16	4.5	613.5	454
F 90 4	**P132**	38	41.3	10	300	265	230	16	14	5	650	455
F 90 4	**P160**	42	45.3	12	350	300	250	23	18	5.5	700.5	461
F 90 4	**P180**	48	51.8	14	350	300	250	23	18	5.5	700.5	461

F 90...HS

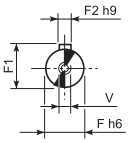

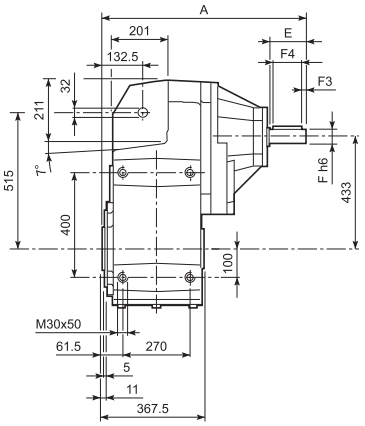

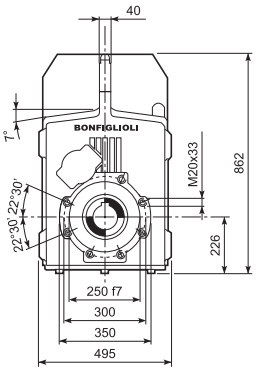

		A	E	F	F1	F2	F3	F4	V	Kg
F 90 3	**HS**	806.5	140	60	64	18	10	120	M16x36	485
F 90 4		673.5	50	24	27	8	2.5	45	M8x19	452

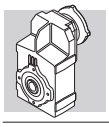

F 90

F 90...H

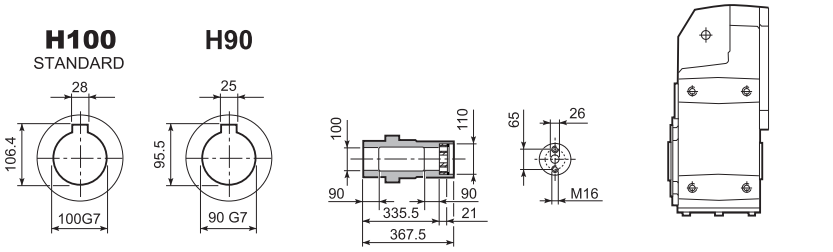

F 90...S

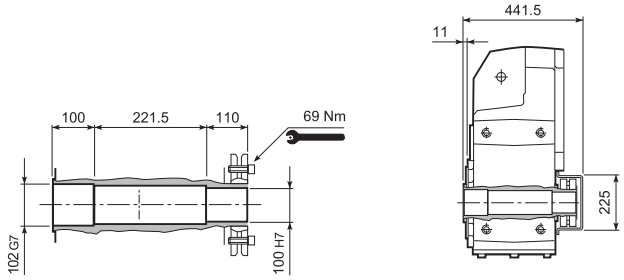

F 90...R

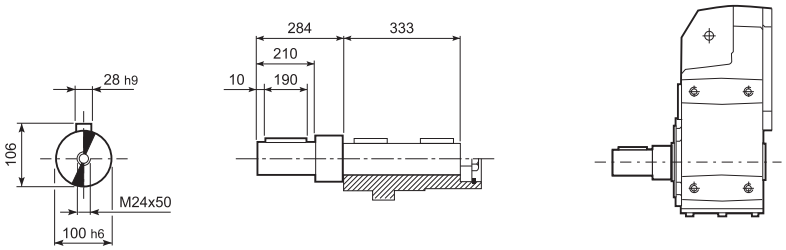

F 90...F...

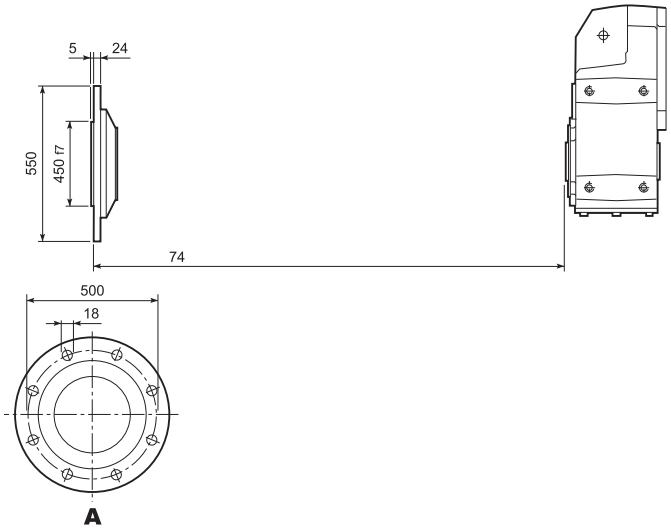

65 ACCESSORIES

Anti-vibration kit

The gearboxes of the F series are supplied with an anti-vibration kit at customer request.
The kit includes all components required for shaft mounting (torque arm is out of scope). Dimensions are shown in the following table.

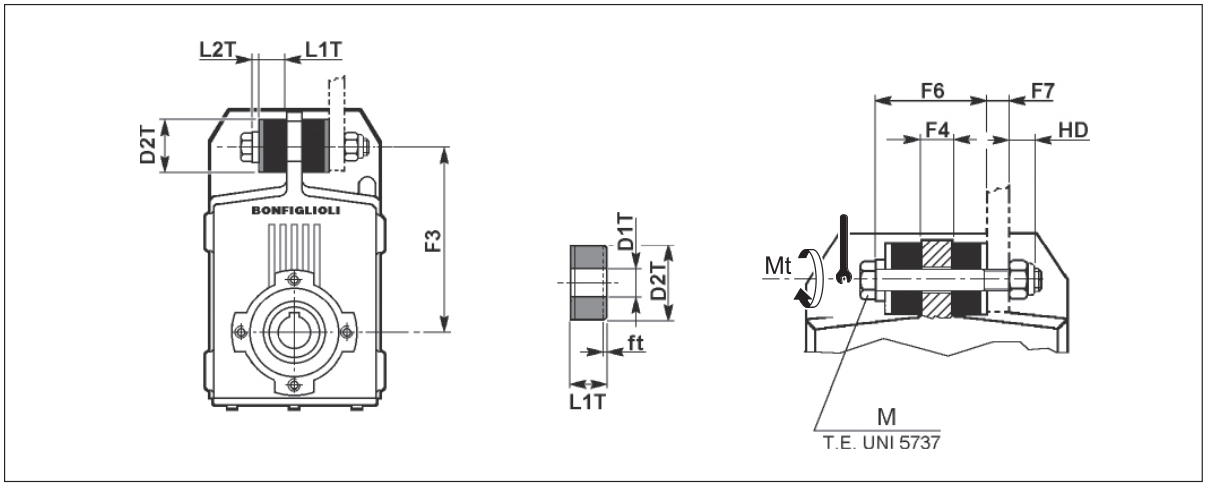

	F3	F4	F6	F7 (max.)	HD	L1T	L2T	D1T	D2T	M	Mt [Nm]	ft
F 10	140	20	55	10	12.3	15	5	11	30	M10x80	10	1.5
F 20	160	20	55	10	12.3	15	5	11	30	M10x80	10	1.5
F 25	162	20	65	20	14.8	20	5	12.5	40	M12x100	20	1.5
F 31	170	20	65	20	14.8	20	5	12.5	40	M12x100	20	1.5
F 41	218	16	61	24	14.8	20	5	12.5	40	M12x100	20	2.3
F 51	278	20	90	47	23	30	10	21	60	M20x160	50	3.0
F 60	325	26	96	41	23	30	10	21	60	M20x160	50	4.0
F 70	370	30	122	50	28	40	12	25	80	M24x200	100	4.0
F 80	430	36	128	44	28	40	12	25	80	M24x200	100	6.0
F 90	515	40	175	40	33.2	60	15	32	100	M30x260	200	9.0

f_t = shortening of the rubber buffer under rated torque transmission.

66 CUSTOMER' SHAFT

Make the driven shaft to be coupled to the gear unit's output shaft from a good quality steel, respecting the dimensions given in the table.

A device such as that illustrated below should also be installed to secure the shaft axially. Take care to verify and dimension the various components to suit the needs of the application.

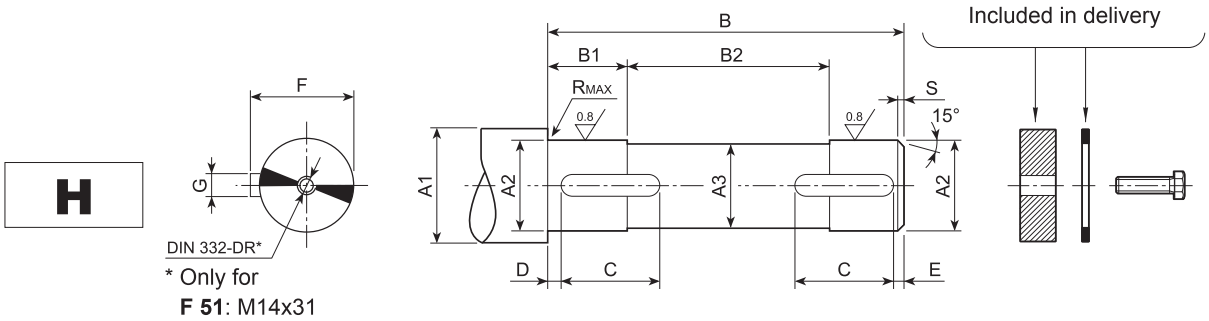

	A1	A2	A3	B	B1	B2	C	D	E	F	G	R	S	UNI 6604	UNI 5739
F 10	≥ 35	30 h7	29	87.5	15.5	56.5	20	2	2	33	8 h9	0.5	1.5	8x7x20 A	M8x25
	≥ 30	25 h7	24	87.5	15.5	56.5	20	2	2	28	8 h9	0.5	1.5	8x7x20 A	
F 20	≥ 42	35 h7	34	99	18	63	22	2	2	38	10 h9	0.5	1.5	10x8x22 A	M8x30
	≥ 35	30 h7	29	99	18	63	22	2	2	33	8 h9	0.5	1.5	8x7x22 A	
F 25	≥ 47	40 h7	39	104	23	58	30	2	2	43	12 h9	0.5	1.5	12x8x30 A	M8x30
	≥ 42	35 h7	34	104	23	58	30	2	2	38	10 h9	0.5	1.5	10x8x30 A	
F 31	≥ 47	40 h7	39	104	28	48	30	2	2	43	12 h9	0.5	1.5	12x8x30 A	M8x30
	≥ 42	35 h7	34	104	28	48	30	2	2	38	10 h9	0.5	1.5	10x8x30 A	
F 41	≥ 52	45 h7	44	118	27.5	63	45	2.5	2.5	48.5	14 h9	1	2.0	14x9x45 A	M10x30
	≥ 47	40 h7	39	118	27.5	63	45	2.5	2.5	43	12 h9	1	2.0	12x8x45 A	
F 51	≥ 63	55 h7	54	139	33	73	50	2.5	2.5	59	16 h9	1	2.0	16x10x50 A	M14x45
	≥ 57	50 h7	49	139	33	73	50	2.5	2.5	53.5	14 h9	1	2.0	14x9x50 A	
F 60	≥ 78	70 h7	69	180	38	104	70	2.5	2.5	74.5	20 h9	1	2.0	20x12x70 A	M16x45
	≥ 68	60 h7	59	180	38	104	70	2.5	2.5	64	18 h9	1	2.0	18x11x70 A	
F 70	≥ 89	80 h7	79	229	58	113	75	3	3	85	22 h9	2.5	2.5	22x14x75 A	M20x55
	≥ 78	70 h7	69	229	58	113	75	3	3	74.5	20 h9	2.5	2.5	20x12x75 A	
F 80	≥ 99	90 h7	89	272	78	116	100	3	3	95	25 h9	2.5	2.5	25x14x100 A	M20x55
	v 89	80 h7	79	272	78	116	100	3	3	85	22 h9	2.5	2.5	22x14x100 A	
F 90	≥ 111	100 h7	99	333	87.5	158	110	3	3	106	28 h9	2.5	2.5	28x16x110 A	M24x65
	≥ 99	90 h7	89	333	87.5	158	110	3	3	95	25 h9	2.5	2.5	25x14x110 A	

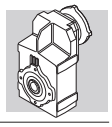

S

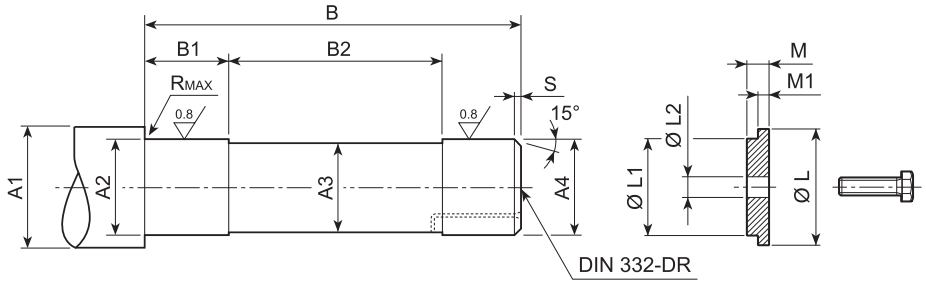

	A1	A2	A3	A4	B	B1	B2	R	S	L	L1	L2	M	M1	UNI 5739
F 10	≥ 36	27 h7	24	25 h6	138	34	70	0.5	1.5	29.5	25 d9	9	7	5.5	M8x25
F 20	≥ 42	32 h7	29	30 h6	160	38	84	0.5	1.5	35.5	30 d9	9	7	5.5	M8x25
F 25	≥ 42	32 h7	30	31 h6	172	38	96	0.5	1.5	35.5	31 d9	9	7	5.5	M8x25
F 31	≥ 50	38 h7	35	36 h6	155	40	73	1	2	43	36 d9	9	7	5.5	M8x25
F 41	≥ 58	44 h7	41	42 h6	177	46.5	82	1	2	49	42 d9	11	8.5	7	M10x30
F 51	≥ 68	54 h7	51	52 g6	201	48	91	1	2	61	52 d9	18	9	7.5	M16x45
F 60	≥ 84	67 h7	64	65 g6	248	53	133	1.5	2	80	65 d9	18	9	7.5	M16x45
F 70	≥ 104	82 h7	79	80 g6	308	78	140	2.5	2.5	95	80 d9	22	13.5	12	M20x55
F 80	≥ 114	92 h7	89	90 g6	365	88	177	2.5	2.5	105	90 d9	22	13.5	12	M20x55
F 90	≥ 126	102 h7	99	100 g6	429.5	98	221.5	2.5	2.5	120	100 d9	26	20	18.5	M24x70

QF

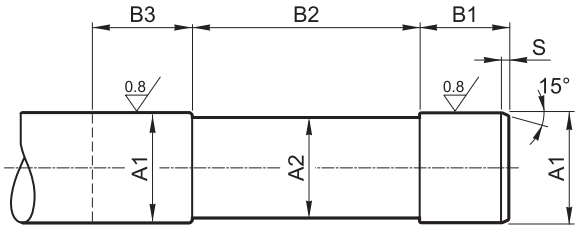

		A1	A2	B1	B2	B3	S
F 10	**QF25**	25 h6	24	41	83	≥ 50	1.5
	QF30	30 h6	29				
F 20	**QF25**	25 h6	24	41	104.5	≥ 50	1.5
	QF30	30 h6	29				
F 25	**QF30**	30 h6	29	41	120.5	≥ 50	1.5
	QF32	32 h6	31				
F 31	**QF35**	35 h6	34	45	95.5	≥ 54	1.5
	QF40	40 h6	39				
F 41	**QF42**	42 h6	41	46	112.5	≥ 55	2
	QF45	45 h6	44				
F 51	**QF50**	50 h6	49	48	131	≥ 57	2
	QF55	55 h6	54				
F 60	**QF60**	60 h6	59	57	158	≥ 66	2.5
	QF65	65 h6	64				
	QF70	70 h6	69				

M1 SYMBOLS AND UNITS OF MEASUREMENT

Symbols	Units of Measure	Description
cosφ	–	Power factor
η	–	Efficiency
f_m	–	Power adjusting factor
I	–	Cyclic duration factor
I_N	[A]	Rated current
I_S	[A]	Locked rotor current
J_C	[Kgm^2]	Load moment of inertia
J_M	[Kgm^2]	Moment of inertia
K_c	–	Torque factor
K_d	–	Load factor
K_J	–	Inertia factor
M_A	[Nm]	Mean breakaway torque
M_B	[Nm]	Brake torque
M_N	[Nm]	Rated torque
M_L	[Nm]	Counter-torque during acceleration
M_S	[Nm]	Starting torque

Symbols	Units of Measure	Description
n	[min^{-1}]	Rated speed
P_B	[W]	Power drawn by the brake at 20°C
P_n	[kW]	Motor rated power
P_r	[kW]	Required power
t_1	[ms]	Brake response time with one-way rectifier
t_{1s}	[ms]	Brake response time with electronic-controlled rectifier
t_2	[ms]	Brake reaction time with a.c. disconnect
t_{2c}	[ms]	Brake reaction time with a.c. and d.c. disconnect
t_a	[°C]	Ambient temperature
t_f	[min]	Work time at constant load
t_r	[min]	Rest time
W	[J]	Braking work between service interval
W_{max}	[J]	Maximum brake work for each braking
Z	[1/h]	Permissible starting frequency, loaded
Z_0	[1/h]	Max. permissible unloaded starting frequency (I = 50%)

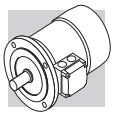

M2 GENERAL CHARACTERISTICS

M2.1 Production range

The asynchronous three-phase electric motors of BONFIGLIOLI RIDUTTORI's production, are available in basic designs IMB5 and derived versions.
The technical characteristics of compact motors, M type, are also supplied in this manual.

M2.2 Standards

The motors described in this catalogue are manufactured to the applicable standards shown in the following table.

(F 1)

Title	CEI	IEC
General requirements for rotating electrical machines	**CEI EN 60034-1**	**IEC 60034-1**
Terminal markings and direction of rotation of rotating machines	**CEI 2-8**	**IEC 60034-8**
Methods of cooling for electrical machines	**CEI EN 60034-6**	**IEC 60034-6**
Dimensions and output ratings for rotating electrical machines	**EN 50347**	**IEC 60072**
Classification of degree of protection provided by enclosures for rotating machines	**CEI EN 60034-5**	**IEC 60034-5**
Noise limits	**CEI EN 60034-9**	**IEC 60034-9**
Classification of type of construction and mounting arrangements	**CEI EN 60034-7**	**IEC 60034-7**
Rated voltage for low voltage mains power	**CEI 8-6**	**IEC 60038**
Vibration level of electric machines	**CEI EN 60034-14**	**IEC 60034-14**

The motors also comply with foreign standards adapted to IEC 60034-1 as shown here below.

(F 2)

DIN VDE 0530	Germany
BS5000 / BS4999	Great Britain
AS 1359	Australia
NBNC 51 - 101	Belgium
NEK - IEC 34	Norway
NF C 51	France
OEVE M 10	Austria
SEV 3009	Switzerland
NEN 3173	Netherlands
SS 426 01 01	Sweden

M2.3 Motors for USA and Canada

CUS

CUS option is available in NEMA Design C execution for BN motors, and NEMA Design B for BX motors, with regards to the electrical features. Motors are certified in compliance with CSA (Canadian Standard) C22.2 N° 100 and UL (Underwriters Laboratory) UL 1004-1 standards, as stated on UL file E308649.
BN motors nameplates show the below marks:

C US

NOTE:
Starting from **June, 1st 2016**, CUS motors whose efficiency is below IE3 (i.e. “Premium Efficiency”) cannot be any longer sold in the USA and Canada, unless one or more of the following conditions apply:

- Double speed motors;
- Motors plated for a non - continuous duty (<80%);
- Motors intended to be operated through variable frequency drive only (properly equipped with “Inverter Duty Only” label, or similar).

The CUS option does not apply to servo-ventilated motors.
US power mains voltages and the corresponding rated voltages to be specified for the motor are indicated in the following table:

(F 3)

Frequency	Mains voltage	V_{mot}
60 Hz	208 V	**200 V**
	240 V	**230 V**
	480 V	**460 V**
	600 V	**575 V**

CUS option is applicable onto 50 Hz operating motors as well.

Motors with voltage in ratio 2 (e.g. 230/460-60; 220/440-60) feature, as standard, a 9-stud terminal board. For same executions, as well as for 575V-60Hz supply, the nominal rating is coincident with the correspondent 50Hz rating.
For DC brake motors type FD, the rectifier is connected to a single-phase 230 VAC supply voltage in the motor terminal box.
Brake power supply for brake motors is as follows:

(F 4)

BN_FD M_FD
Wired to terminal box 1~230V a.c.

BN_FA M_FA		Specify
Separate power supply	230V Δ	230SA
Separate power supply	460V Y	460SA

M2.4 China Compulsory Certification

CCC

Electric motors destined for sale in the People's Republic of China have to be certified under the CCC (China Compulsory Certification) system. BN motors of up to 7 Nm in rated torque are available with CCC certification and a special nameplate bearing the mark shown below:

CCC option is not currently available for servo - ventilated motors.

M2.5 Directives 2006/95/EC (LVD) and 2004/108/EC (EMC)

BN and M motors meet the requirements of Directives 2006/95/EC (Low Voltage Directive) and 2004/108/EC (Electromagnetic Compatibility Directive) and their name plates bear the CE mark.
As for the EMC Directive, construction is in accordance with standards CEI EN 60034-1, EN 61000-6-2, EN 61000-6-4.
Motors with FD brakes, when fitted with the suitable capacitive filter at rectifier input (option **CF**), meet the emission limits required by Standard EN 61000-6-3:2007 "Electromagnetic compatibility - Generic Emission Standard - Part 6-3 Residential, commercial and light industrial environment".
Motors also meet the requirements of standard CEI EN 60204-1 "Electrical equipment of machines".
The responsibility for final product safety and compliance with applicable directives rests with the manufacturer or the assembler who incorporate the motors as component parts.

M2.6 Tolerances

As per the Norms applicable the tolerances here below apply to the following quantities.

(F 5)

-0.15 (1 - η) P ≤ 50kW	Efficiency
-(1 - cosφ)/6 min 0.02 max 0.07	Power factor
±20% *	Slip
+20%	Locked rotor current
-15% +25%	Locked rotor torque
-10%	Max. torque

* ± 30% for motors with Pn < 1 kW

M3 MECHANICAL FEATURES

M3.1 Versions

EC-normalised BN motors are available in the design versions indicated in table (F6) as per Standards CEI EN 60034-14.

Mounting versions are:

IM B5 (basic)
IM V1, IM V3 (derived)

IM B5 design motors can be installed in positions IM V1 and IM V3; in such cases, the basic design IM B5 is indicated on the motor name plate.
In design versions with a vertically located motor and shaft downwards, it is recommended to request the drip cover (always necessary for brake motors). This facility, included in the option list should be specified when ordering as it does not come as a standard device

(F 6)

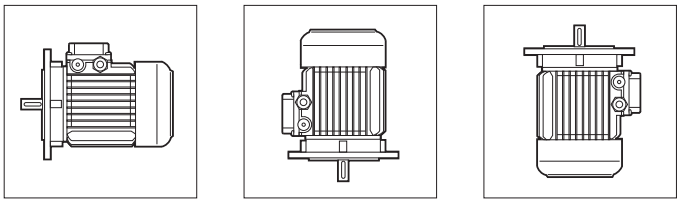

IM B5 **IM V1** **IM V3**

Flange output motors are also available with reduced coupling dimensions, as indicated in the table below - executions **B5R**. Their use in combination with gearboxes must be however coherent with the maximum installable power on gearboxes themselves (see chapters “Motors availability”). In case this condition is not met need to contact the Technical Service for the checking of the combination.

(F 7)

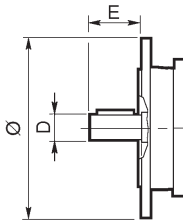

	BN 71	BN 80	BN 90	BN 100	BN 112	BN 132
	DxE - Ø					
B5R (1)	11x23 - 140	14x30 - 160	19x40 - 200	24x50 - 200	24x50 - 200	28x60 - 250

(1) flange with through holes

M3.2 Degree of protection

IP..

The following chart provides an overview of the degrees of protection available.
In addition to the degree of protection specified when ordering, motors to be installed outdoors require protection against direct sunlight and also – when they are to be installed vertically down – a drip cover to prevent the ingress of water and solid particles (option **RC**).

(F 8)

		IP 54	IP 55	IP 56
BN	**M**	⊖	standard	on request
BN_FD **BN_FA**	**M_FD** **M_FA**	standard	on request	⊖

M3.3 Cooling

The motors are externally ventilated (IC 411 to CEI EN 60034-6) and are equipped with a plastic fan working in both directions. The motors must be installed allowing sufficient space between fan cowl and the nearest wall to ensure free air intake and allow access for maintenance purposes on motor and brake, if supplied.
Independent, forced air ventilation (IC 416) can be supplied on request (option U1).
This solution enables to increase the motor duty factor when driven by an inverter and operating at reduced speed.

M3.4 Direction of rotation

Rotation is possible in both directions. If terminals U1, V1, and W1 are connected to line phases L1,L2 and L3, clockwise rotation (looking from drive end) is obtained. For counterclockwise rotation, switch two phases.

M3.5 Noise

Noise levels, measured using the method prescribed by ISO 1680 Standards, are within the maximum levels specified by Standards CEI EN 60034-9.

M3.6 Vibrations and balancing

Rotor shafts are balanced with half key fitted and fall within the vibration class N, as per Standard CEI EN 60034-14.
If a further reduced noise level is required improved balancing carequired improved balancing can be optionally requested (class B).
Table below shows the value for the vibration velocity for standard (A) and improved (B) balancing.

(F 9)

Vibration class	Angular velocity n [min^{-1}]	Limits of the vibration velocity [mm/s] **BN 56 ≤ H ≤ BN 200** **M05 ≤ H ≤ M5**
A	600 < n < 3600	1.6
B	600 < n < 3600	0.70

Values refer to measures with freely suspended motor in unloaded conditions.

M3.7 Terminal box

Terminal board features 6 studs for eyelet terminal connection (9 studs execution for US voltage “Dual Voltage”).
A ground terminal is also supplied for earthing of the equipment.
Terminals number and type are shown in the following table.
For brake power supply, please read par. M6 (brake FD), M7 (brake FA).
Brakemotors house the a.c./d.c. rectifier (factory pre-wired) inside the terminal box.
Wiring instructions are provided either in the box or in the user manual.

(F 10)

		No. of terminals	Terminal threads	Wire max cross section area mm^2
BN 56 ... BN 71	**M05, M1**	6	M4	2.5
BN 80, BN 90	**M2**	6	M4	2.5
BN 100 ... BN 112	**M3**	6	M5	6
BN 132 ... BN 160MR	**M4**	6	M5	6
BN 160M ... BN 180M	**M5**	6	M6	16
BN 180L ... BN 200L	**–**	6	M8	25
BN 63 ... BN 160MR	**M05 ... M4**	9	M4	6
BN 160M ... BN 200L	**M5**	9	M6	16

M3.8 Cable entry

The holes used to bring cables to terminal boxes use metric threads in accordance with standard EN 50262 as indicated in the table here after.

(F 11)

		Cable entry	Max. cable diameter allowed [mm]
BN 63	**M05**	2 x M20 x 1.5	13
BN 71	**M1**	2 x M25 x 1.5	17
BN 80 - BN 90	**M2**	2 x M25 x 1.5	17
BN 100	**M3**	2 x M32 x 1.5	21
		2 x M25 x 1.5	17
BN 112	**—**	2 x M32 x 1.5	21
		2 x M25 x 1.5	17
BN 132...BN 160MR	**M4**	4 x M32 x 1.5	21
BN 160M...BN 200L	**M5**	2 x M40 x 1.5	28

M3.9 Bearings

Life lubricated preloaded radial ball bearings are used, types are shown in the chart here under.
Calculated endurance lifetime L_{10h}, as per ISO 281, in unloaded condition, exceeds 40000 hrs.
DE = drive end
NDE = non drive end

(F 12)

	DE	**NDE**	
	M, M_FD, M_FA	**M**	**M_FD, M_FA**
M05	6004 2Z C3	6201 2Z C3	6201 2RS C3
M1	6004 2Z C3	6202 2Z C3	6202 2RS C3
M2	6007 2Z C3	6204 2Z C3	6204 2RS C3
M3	6207 2Z C3	6206 2Z C3	6206 2RS C3
M4	6309 2Z C3	6308 2Z C3	6308 2RS C3
M5	6309 2Z C3	6309 2Z C3	6309 2RS C3

(F 13)

	DE	**NDE**	
	BN	**BN**	**BN_FD BN_FA**
BN 56	6201 2Z C3	6201 2Z C3	–
BN 63	6201 2Z C3	6201 2Z C3	6201 2RS C3
BN 71	6202 2Z C3	6202 2Z C3	6202 2RS C3
BN 80	6204 2Z C3	6204 2Z C3	6204 2RS C3
BN 90	6205 2Z C3	6205 2Z C3	6305 2RS C3
BN 100	6206 2Z C3	6206 2Z C3	6206 2RS C3
BN 112	6306 2Z C3	6306 2Z C3	6306 2RS C3
BN 132	6308 2Z C3	6308 2Z C3	6308 2RS C3
BN 160MR	6309 2Z C3	6308 2Z C3	6308 2RS C3
BN 160M/L	6309 2Z C3	6309 2Z C3	6309 2RS C3
BN 180M	6310 2Z C3	6309 2Z C3	6309 2RS C3
BN 180L	6310 2Z C3	6310 2Z C3	6310 2RS C3
BN 200L	6312 2Z C3	6310 2Z C3	6310 2RS C3

M4 ELECTRICAL CHARACTERISTICS

M4.1 Voltage

Single speed motors are provided in standard execution either for nominal voltage 230 / 400 V Δ/Y, 50 Hz, or 400 / 690 V Δ/Y, 50 Hz, with a voltage tolerance of ± 10%, according to what is specified on the below table.
On all the motors BN and M, for which the voltage / frequency configuration is not included on the below table, the voltage tolerance is reduced down to ± 5%.
For the operation out of the tolerance boundaries, the temperature may exceed by 10 K the limit provided by the adopted insulation class.
The motors are suitable for operation on distribution European grid with voltage complying with the pubblication IEC 60038.

(F 14)

			V_{mot} ± 10 % 3 ~	**Configuation**
IE1	**BN 56 … BN 132**	**M0 … M4**	230 / 400 V - Δ/Y - 50 Hz	Standard
			400 / 690 V - Δ/Y - 50 Hz	On request at no extra charge
			460 V Y - 60 Hz	Standard
	BN 160 … 200	**M5**	400 / 690 V - Δ/Y - 50 Hz	Standard
			460 V Δ - 60 Hz	Standard

[1] 4 pole motor only

The only rated voltage for motors type 50Hz and all double speed motors is 400V.
Applicable tolerances as per CEI EN 60034-1.

The table below shows the wiring options available.

(F 15)

Pole		Wiring options
2	**BN 63 … BN 200**	Δ / Y (²)
4	**BN 56 … BN 200**	
6	**BN 63 … BN 200**	
8	**BN 71 … BN 132**	
2/4	**BN 63 … BN 132**	Δ / YY (Dahlander)
2/6	**BN 71 … BN 132**	Y / Y (Two windings)
2/8	**BN 71 … BN 132**	
2/12	**BN 80 … BN 132**	
4/6	**BN 71 … BN 132**	
4/8	**BN 80 … BN 132**	Δ / YY (Dahlander)

(²) Motors with voltage in ratio 2 (ex. 230/460 - 60) will be equipped with a 9 pin terminal box with winding connection either Δ Δ/ Δ or YY / Y (except 6 pole BN 63 Δ / Y)

M4.2 Frequency

Rated output power BN / M for 60 Hz operation is shown in the following diagram.

(F 16)

		P_n [kW]			
		2P	**4P**	**6P**	**8P (*)**
BN 56A	**–**	–	0.07	–	–
BN 56B	**M0B**	–	0.1	–	–
BN 63A	**M05A**	0.21	0.14	0.1	–
BN 63B	**M05B**	0.3	0.21	0.14	–
BN 63C	**M05C**	0.45	0.3	–	–
BN 71A	**–**	0.45	0.3	0.21	0.1
–	**M1SC**	–	–	0.21	–
BN 71B	**M05SD**	0.65	0.45	0.3	0.14
BN 71C	**M1LA**	0.9	0.65	0.45	–
BN 80A	**–**	0.9	0.65	0.45	0.21
BN 80B	**M2SA**	1.3	0.9	0.65	0.30
BN 80C	**M2SB**	1.8	1.3	0.9	–
BN 90S	**–**	–	1.3	0.9	0.45
BN 90SA		1.8	–	–	–
BN 90SB		2.2	–	–	–
BN 90L	**M3SA**	2.5	–	1.3	0.65
BN 90LA		–	1.8	–	–
BN 90LB	**–**	–	2.2	–	–

		P_n [kW]			
		2P	**4P**	**6P**	**8P (*)**
BN 100L	**M3LA**	3.5	–	–	–
BN 100LA		–	2.5	1.8	0.9
BN 100LB	**M3LB**	4.7	3.5	2.2	1.3
BN 112M	**–**	4.7	4.7	2.5	1.8
–	**M3LC**	–	4.7	2.5	–
BN 132S	**M4SA**	–	6.5	3.5	2.5
BN 132SA		6.5	–	–	–
BN 132SB	**M4SB**	8.7	–	–	–
BN 132M	**M4LA**	11	–	–	3.5
BN 132MA		–	8.7	4.6	–
BN 132MB	**M4LB**	–	11	6.5	–
BN 160MR	**M4LC**	12.5	12.5	–	–
BN 160M	**M5SA**	–	–	8.6	–
BN 160MB	**–**	17.5	–	–	–
–	**M5SB**	17.5	17.5	–	–
BN 160L	**–**	21.5	17.5	12.6	–
–	**M5SC**	21.5	–	–	–
BN 180M	**M5LA**	24.5	21.5	–	–
BN 180L	**–**	–	25.3	17.5	–
BN 200L	**–**	–	34	–	–
BN 200LA	**–**	34	–	22	–

(*) Excluded M_ motors

Double speed BN / M motors supplied at 60 Hz will have an increase of nominal power, referred to 50 Hz, equal to 15%.
If a nominal power rating, equal to the normalised nominal power rating at 50 Hz, was requested to be on a nameplate of a motor meant to be voltage supplied at 60 Hz, the PN option shall be specified on the motor designation.
Motors normally designed for a 50 Hz frequency may be used on a 60 Hz operating grid, but the related data shall be updated according to the following table.
Motors designated for 50 Hz operation show on the nameplate also the values for 60 Hz operation (excluding motors in CUS execution and brake motors). See the following table.

(F 17)

50 Hz	**60 Hz**			
V - 50 Hz	**V** - 60 Hz	**Pn** - 60 Hz	M_n, M_a/M_n - 60 Hz	**n** [min^{-1}] - 60 Hz
230/400 Δ/Y	220 - 240 Δ	1	0.83	1.2
	380 - 415 Y			
400/690 Δ/Y	380 - 415 Δ			
230/400 Δ/Y	265 - 280 Δ	1.15	1	1.2
	440 - 480 Y			
400/690 Δ/Y	440 - 480 Δ			

M4.3 Ambient temperature

Catalogue rating values are calculated for 50 Hz operation and for standard ambient conditions (temperature 40 °C; elevation <1000 m a.s.l.) as per the CEI EN 60034-1 Standards.
The motors can be used within the 40 - 60 °C temperature range with rated power output adjusted by factors given in the following charts.

(F 18)

Ambient temperature (°C)	40°	45°	50°	55°	60°
Permitted power as a % of rated power	100%	95%	90%	85%	80%

Should a derating factor higher than 15% apply please consult factory.

M4.4 Insulation class

CL F

Bonfiglioli motors use class **F** insulating materials (enamelled wire, insulators, impregnation resins) as compare to the standard motor.

CL H

Motors manufactured in insulation class **H** are available at request.
In standard motors, stator windings over temperature normally stays below the 80 K limit corresponding to class B over temperature.
A careful selection of insulating components makes the motors compatible with tropical climates and normal vibration.
For applications involving the presence of aggressive chemicals or high humidity, contact Bonfiglioli Engineering for assistance with product selection.
Not available for motors in compliance with CSA e UL standards (CUS option).

(F 19)

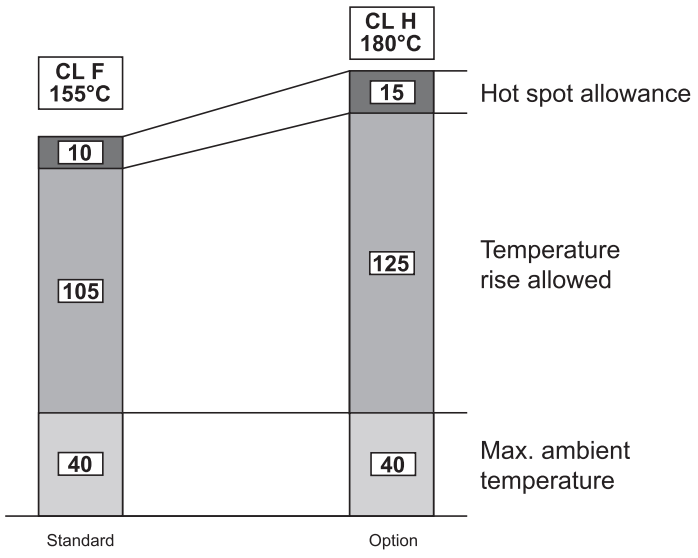

M4.5 Type of duty

Unless otherwise specified, catalogue motor power refers to continuous duty S1.
Any operating conditions other than S1 duty must be identified in accordance with duty cycle definitions laid down in standards CEI EN 60034-1.
For duty cycles S2 and S3, the power increase co-efficient reported in the following table may be used. Please note that the table provided below applies to single-speed motors.
As an alternative to S1 continuous duty, one of the following values can be specified at the product configuration stage: S2, S3 or S9. The motor nameplate will be marked with an increased power rating to suit the type of duty, and with specific electrical data and a duty type of S2-30 min, S3-70% or S9 respectively.
For further details, contact Bonfiglioli's Technical Service.
Please contact Bonfiglioli Engineering for the power increase coefficients applicable to switch-pole motors.
(F 20)

	Duty						
	S2			**S3 ***			**S4 - S9**
	Cycle duration (min)			Cyclic duration factor (I)			Consult factory
	10	**30 (*)**	**60**	**25%**	**40%**	**70% (*)**	
f_m	1.35	1.15	1.05	1.25	1.15	1.1	

* Cycle duration must, in any event, be equal to or less than 10 minutes; if this time is exceeded, please contact our Technical Service.
(*) Default values from options.

M4.5.1 Cyclic duration factor:

$$I = \frac{t_f}{t_f + t_r} \cdot 100 \qquad (23)$$

t_f = work time under constant load
t_r = rest time

M4.5.2 Limited duration duty S2

This type of duty is characterized by operation at constant load for a limited time, which is shorter than the time required to reach thermal equilibrium, followed by a rest period of sufficient duration to restore ambient temperature in the motor.

M4.5.3 Periodical intermittent duty S3:

This type of duty is characterized by a sequence of identical operation cycles, each including a constant load operation period and a rest period.
For this type of duty, the starting current does not significantly influence overtemperature.

M4.6 Inverter-controlled motors

The electric motors of series BN and M may be used in combination with PWM inverters with rated voltage at transformer input up to 500 V.Standard motors use a phase insulating system with separators, class 2 enamelled wire and class H impregnation resins (1600V peak-to-peak voltage pulse capacity and rise edge t_s > 0.1µs at motor terminals). The following table shows the typical torque/ speed curves referred to S1 duty for motors with base frequency f_b = 50 Hz.
Because ventilation is somewhat impaired in operation at lower frequencies (about 30 Hz), standard motors with incorporated fan (IC411) require adequate torque derating or - alternately - the addition of a separate supply fan cooling.
Above base frequency, upon reaching the maximum output voltage of the inverter, the motor enters a steady-power field of operation, and shaft torque drops with ratio (f/f_b).
As motor maximum torque decreases with $(f/f_b)^2$, the allowed overloading must be reduced progressively.

(F 21)

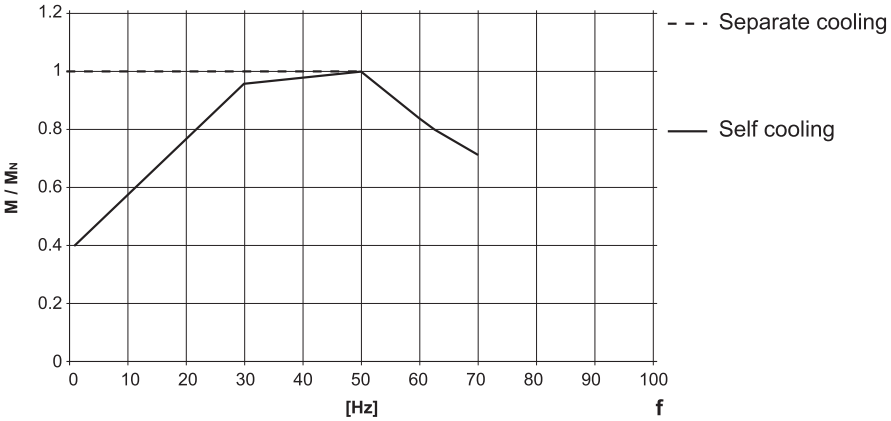

The following table reports the mechanical limit speed for motor operation above rated frequency:

(F 22)

		n [min-1]		
		2p	**4p**	**6p**
≤ BN 112	**M05…M3**	5200	4000	3000
≥ BN 132	**M4, M5**	4500	4000	3000

Above rated speed, motors generate increased mechanical vibration and fan noise. Class B rotor balancing is highly recommended in these applications. Installing a separate supply fan cooling may also be advisable.

Remote-controlled fan and brake (if fitted) must always be connected direct to mains power supply.

M4.7 Permissible starts per hour, Z

The rating charts of brakemotors lend the permitted number of starts Z_0, based on 50% intermittence and for unloaded operation.
The catalogue value represents the maximum number of starts per hour for the motor without exceeding the rated temperature for the insulation class F.
To give a practical example for an application characterized by inertia J_c, drawing power P_r and requiring mean torque at start-up M_L the actual number of starts per hour for the motor can be calculated approximately through the following equation:

$$Z = \frac{Z_0 \cdot K_c \cdot K_d}{K_J} \qquad (24)$$

where:

$K_J = \frac{J_m + J_c}{J_m}$	inertia factor
$K_c = \frac{M_a - M_L}{M_a}$	torque factor
$K_d =$	load factor see table (F23)

(F 23)

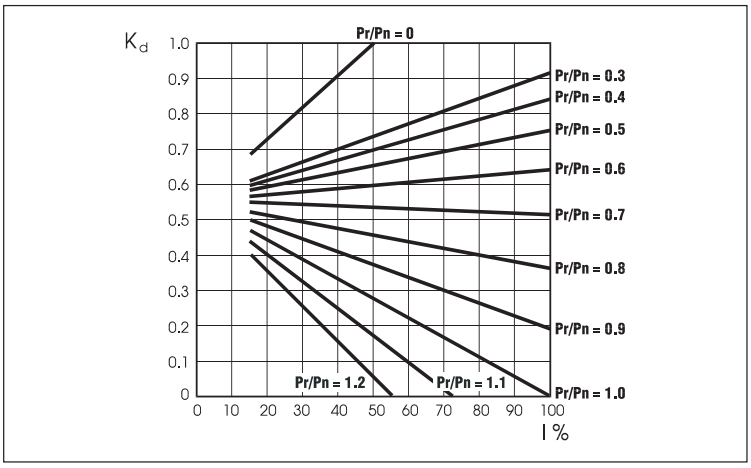

If actual starts per hour is within permitted value (Z) it may be worth checking that braking work is compatible with brake (thermal) capacity W_{max} also given in tables (F30), (F38) and dependent on the number of switches (c/h).

M5 ASYNCHRONOUS BRAKE MOTORS

M5.1 Operation

Versions with incorporated brake use spring-applied DC (FD option) or AC (FA options) brakes.
All brakes are designed to provide fail-safe operation, meaning that they are applied by spring-action in the event of power failure.

(F 24)

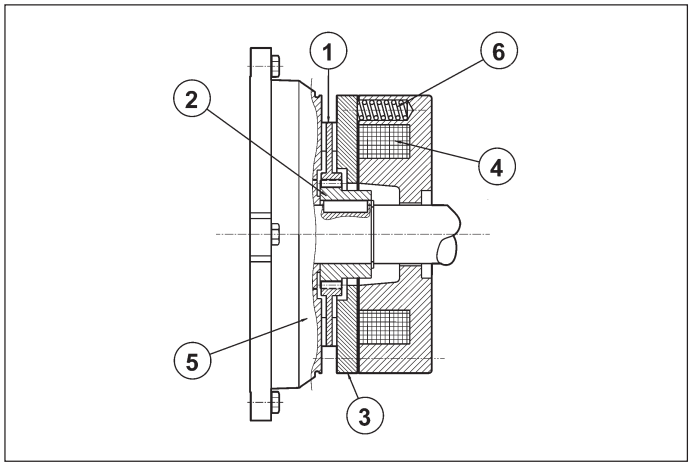

Key:
① brake disc
② disc carrier
③ pressure plate
④ brake coil
⑤ motor rear shield
⑥ brake springs

When voltage is interrupted, pressure springs push the armature plate against the brake disc. The disc becomes trapped between the armature plate and motor shield and stops the shaft from rotation. When the coil is energized, a magnetic field strong enough to overcome spring action attracts the armature plate, so that the brake disc – which is integral with the motor shaft – is released.

M5.2 Most significant features

- High braking torques (normally $M_b \approx 2$ Mn), braking torque adjustment.
- Steel brake disc with double friction lining (low-wear, asbestos-free lining).
- Hexagonal seat on motor shaft fan end (N.D.E.) for manual rotation (not compatible with options PS, RC, TC, U1, U2, EN1, EN2, EN3, EN4, EN5, EN6).
- Manual release lever (options **R** and **RM** for BN/M_FD; option **R** for BN/M_FA).
- Corrosion-proof treatment on all brake surfaces.
- Insulation class F.

M6 DC BRAKE MOTORS TYPE BN_FD and M_FD

Frame sizes: BN 63 … BN 200L / M05 ... M5

(F 25)

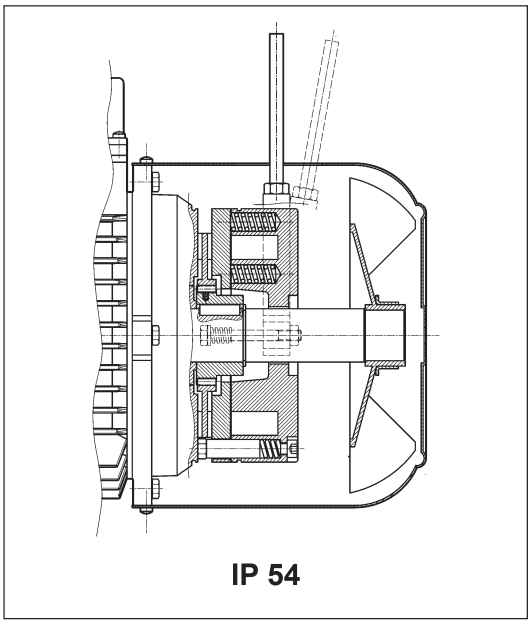

(F 26)

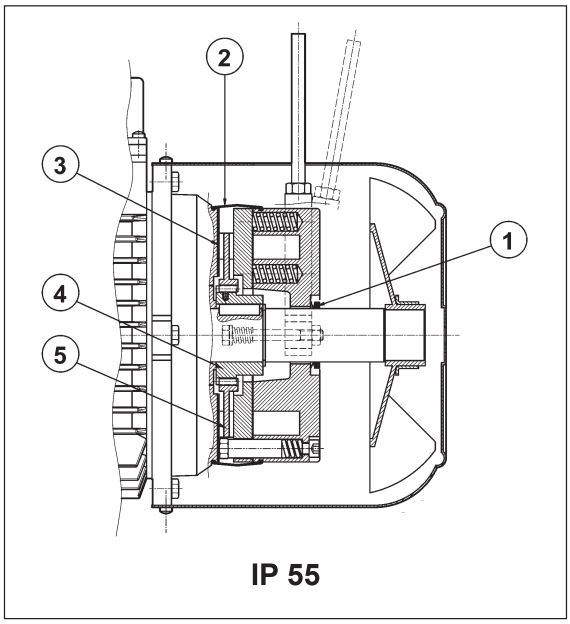

Direct current toroidal-coil electromagnetic brake bolted onto motor shield. Preloading springs provide axial positioning of magnet body.
Brake disc slides axially on steel hub shrunk onto motor shaft with anti-vibration device.
Brake torque factory setting is indicated in the corresponding motor rating charts. Braking torque may be modified by changing the type and/or number of springs.
At request, motors may be equipped with manual release lever with automatic return (**R**) or system for holding brake in the released position (**RM**).
See variant at paragraph “BRAKE RELEASE SYSTEMS” for available release lever locations.
FD brakes ensure excellent dynamic performance with low noise. DC brake operating characteristics may be optimized to meet application requirements by choosing from the various rectifier/power supply and wiring connection options available.
For applications involving lifting and/or high hourly energy dissipation, contact Bonfiglioli’s Technical Service.

M6.1 Degree of protection

Standard protection class is IP54.
Brake motor FD is also available in protection class **IP55**, which mandates the following variants:

① V-ring at N.D.E. of motor shaft
② dust and water-proof rubber boot
③ stainless steel ring placed between motor shieldand brake disc
④ stainless steel hub
⑤ stainless steel brake disc

M6.2 FD brake power supply

A rectifier accommodated inside the terminal box feeds the DC brake coil. Wiring connection across rectifier and brake coil is performed at the factory.
On all single-pole motors, rectifier is connected to the motor terminal board.
Rectifier standard power supply voltage VB is as indicated in the following table, regardless of mains frequency:

(F 27)

2, 4, 6 P					**1 speed**
		BN_FD / M_FD		brake connected to terminal board power supply	separate power supply
		V_{mot} ± 10% 3 ~	V_B ± 10% 1 ~		
BN 63…BN 132	**M05...M4LB**	230/400 V – 50 Hz	230 V	standard	specify **V_B SA** o **V_B SD**
BN 160…BN 200	**M4LC...M5**	400/690 V – 50 Hz	400 V	standard	specify **V_B SA** o **V_B SD**

Switch-pole motors feature a separate power supply line for the brake with rectifier input voltage V_B as indicated in the table below:

(F 28)

2/4, 2/6, 2/8, 2/12, 4/6, 4/8 P					**2 speed**
		BN_FD / M_FD		brake connected to terminal board power supply	separate power supply
		V_{mot} ± 10% 3 ~	V_B ± 10% 1 ~		
BN 63…BN 132	**M05...M4LB**	400 V – 50 Hz	230 V	⊖	specify **V_B SA** o **V_B SD**

The diode half-wave rectifier (VDC ≈ 0,45 x VAC) is available in versions **NB, SB, NBR** e **SBR**, as detailed in the table below:

(F 29)

		brake	standard	at request
BN 63	**M05**	**FD 02**	**NB** 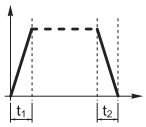	**SB** 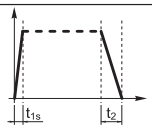
BN 71	**M1**	**FD 03** **FD 53**		**SBR** 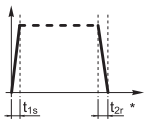
BN 80	**M2**	**FD 04**		**NBR** 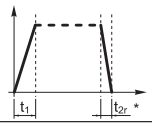
BN 90S	**—**	**FD 14**		
BN 90L	**—**	**FD 05**		
BN 100	**M3**	**FD 15**		
—		**FD 55**	**SB** 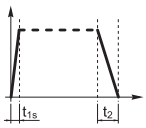	**SBR** 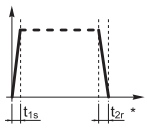
BN 112	**—**	**FD 06S**		
BN 132 - BN 160MR	**M4**	**FD 56** **FD 06** **FD 07**		
BN 160L - BN 180M	**M5**	**FD 08**		
BN 180L - BN 200M	**—**	**FD 09**		

(*) $t_{2c} < t_{2r} < t_2$

Rectifier **SB** with electronic energizing control over-energizes the electromagnet upon power-up to cut brake release response time and then switches to normal half-wave operation once the brake has been released.

Use of the **SB** rectifier is mandatory in the event of:
- high number of operations per hour
- reduced brake release response time
- brake is exposed to extreme thermal stress

Rectifiers **NBR** or **SBR** are available for applications requiring quick brake intervention (braking condition reinstatement) response.
These rectifiers complement the **NB** and **SB** types as their electronic circuit incorporates a static switch that de-energizes the brake quickly in the event voltage is missing.
This arrangement ensures short brake release response time with no need for additional external wiring and contacts.
Optimum performance of rectifiers **NBR** and **SBR** is achieved with separate brake power supply.
Versions available: 230Vac ±10%, 400Vac ± 10%, 50/60 Hz (with power supply); 100Vdc ±10%, 180Vdc ± 10% (with SD option).

M6.3 FD brake technical specifications

The table below reports the technical specifications of DC brakes FD.

(F 30)

Brake	Brake torque M_b [Nm] springs			Release		Braking		W_{max} per brake operation [J]			W	P
				t_1	$t_{1\,s}$	t_2	t_{2c}					
	6	4	2	[ms]	[ms]	[ms]	[ms]	10 s/h	100 s/h	1000 s/h	[MJ]	[W]
FD02	–	3.5	1.75	30	15	80	9	4500	1400	180	15	17
FD03	5	3.5	1.75	50	20	100	12	7000	1900	230	25	24
FD53	7.5	5	2.5	60	30	100	12					
FD04	15	10	5	80	35	140	15	10000	3100	350	30	33
FD14												
FD05	40	26	13	130	65	170	20	18000	4500	500	50	45
FD15	40	26	13	130	65	170	20					
FD55	55	37	18	–	65	170	20					
FD06S	60	40	20	–	80	220	25	20000	4800	550	70	55
FD56	–	75	37	–	90	250	20	29000	7400	800	80	65
FD06		100	50		100	250	20					
FD07	150	100	50	–	120	200	25	40000	9300	1000	130	65
FD08*	250	200	170	–	140	350	30	60000	14000	1500	230	100
FD09**	400	300	200	–	200	450	40	70000	15000	1700	230	120

* brake torque values obtained with 9, 7 and 6 springs, respectively

** brake torque values obtained with 12, 9 and 6 springs, respectively

t_1 = brake release time with half-wave rectifier
t_{1s} = brake release time with over-energizing rectifier
t_2 = brake engagement time with AC line interruption and separate power supply
t_{2c} = brake engagement time with AC and DC line interruption – Values for t1, t1s, t2, t2c indicated in the tab. (F30) are referred to brake set at maximum torque, medium air gap and rated voltage
W_{max} = max energy per brake operation
W = braking energy between two successive air gap adjustments
P_b = brake power absorption at 20 °C
M_b = static braking torque (±15%)
s/h = starts per hour

The brake pad wear depends on the operating/ambient conditions (temperature, humidity, angular speed, specifica pressure); Therefore the declared wear rate must be considered as indicative.

M6.4 FD brake connections

On standard single-pole motors, the rectifier is connected to the motor terminal board at the factory. For switch-pole motors and where a separate brake power supply is required, connection to rectifier must comply with brake voltage VB stated in motor name plate.
Because the load is of the inductive type, brake control and DC line interruption must use contacts from the usage class AC-3 to IEC 60947-4-1.

Table (F31) – Brake power supply from motor terminals and AC line interruption
Delayed stop time t_2 and function of motor time constants.
Mandatory when soft-start/stops are required.
Table (F32) – Brake coil with separate power supply and AC line interruption
Normal stop time independent of motor.
Achieved stop times t_2 are indicated in the table (F30).
Table (F33) – Brake coil power supply from motor terminals and AC/DC line interruption.
Quick stop with operation times t_{2c} as per table (F30).
Table (F34) – Brake coil with separate power supply and AC/DC line interruption.
Stop time decreases by values t_{2c} indicated in the table (F30).

The brake may be voltage supplied directly from the motor terminal box (from tab. F31 to tab. F34) only if the nominal voltage of the brake is the same as the smaller voltage of the motor.

(F 31)

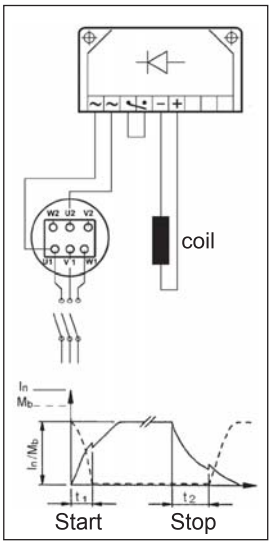

(F 32)

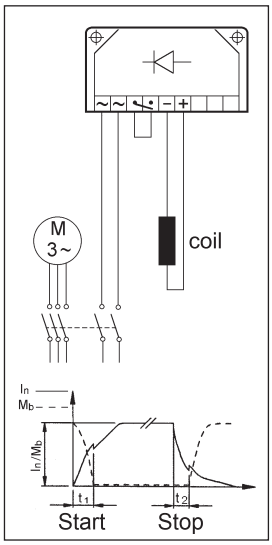

(F 33)

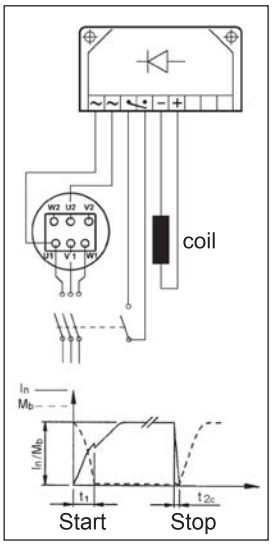

(F 34)

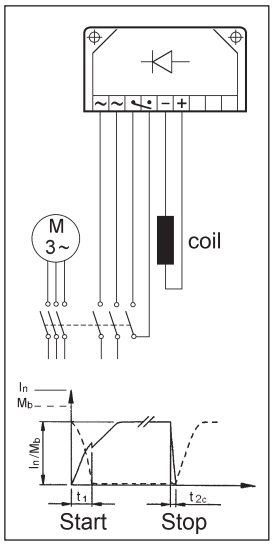

M7 AC BRAKE MOTORS TYPE BN_FA and M_FA

Frame sizes: BN 63 … BN 180M / M05 ... M5

(F 35)

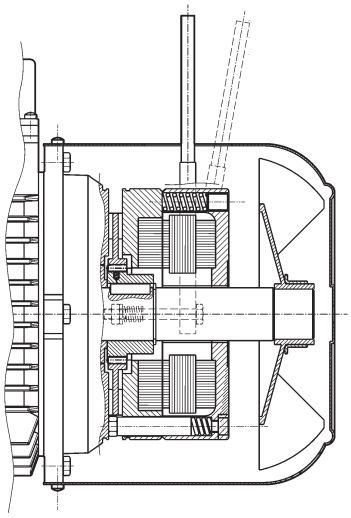

IP 54

(F 36)

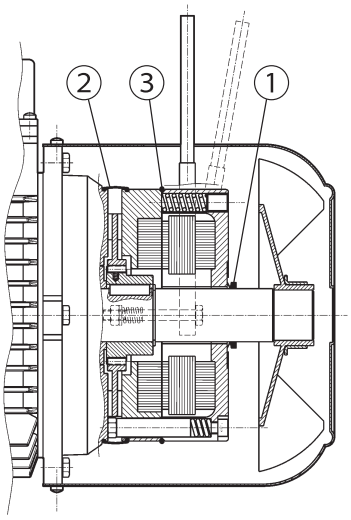

IP 55

Electromagnetic brake operates from three-phase **alternated current** power supply and is bolted onto conveyor shield. Preloading springs provide axial positioning of magnet body.
Steel brake disc slides axially on steel hub shrunk onto motor shaft with anti-vibration device.
Brake torque factory setting is indicated in the corresponding motor rating charts.
Spring preloading screws provide stepless braking torque adjustment.
Torque adjustment range is 30% $M_{bMAX} < M_b < M_{bMAX}$ (where M_{bMAX} is maximum braking torque as shown in tab. (F38).
Thanks to their high dynamic characteristics, FA brakes are ideal for heavy-duty applications as well as applications requiring frequent stop/starts and very fast response time.
Motors may be equipped with manual release lever with automatic return (**R**) at request. See variant at paragraph “BRAKE RELEASE SYSTEMS” for available release lever locations.
For applications involving lifting and/or high hourly energy dissipation, contact Bonfiglioli’s Technical Service.

M7.1 Degree of protection

Standard protection class is IP54.
Brake motor FA is also available in protection class **IP55**, which mandates the following variants:

① V-ring at N.D.E. of motor shaft
② dust and water-proof rubber boot
③ O-ring

M7.2 FA brake power supply

In single speed motors, power supply is brought to the brake coil direct from the motor terminal box. As a result, brake voltage and motor voltage are the same. In this case, brake voltage indication may be omitted in the designation.
Switch-pole motors and motors with separate brake power supply feature an auxiliary terminal board with 6 terminals for connection to brake line. In both cases, brake voltage indication in the designation is mandatory.
The following table reports standard AC brake power supply ratings for single- and switch-pole motors:
(F 37)

	BN 63…BN 132	BN 160…BN 180
single-pole motor	**M05...M4LB**	**M4LC...M5**
	230Δ / 400Y V ±10% – 50 Hz	400Δ/ 690Y V ±10% – 50 Hz
	265Δ / 460Y ±10% - 60 Hz	460Y – 60 Hz

	BN 63…BN 132
switch-pole motors (separate power supply line)	**M05...M4**
	230Δ / 400Y V ±10% – 50 Hz
	460Y - 60 Hz

Unless otherwise specified, standard brake power supply is 230Δ /400Y V - 50 Hz.

Special voltages in the 24…690 V, 50-60 Hz range are available at request.

M7.3 Technical specifications of FA brakes

(F 38)

Brake	Brake torque M_b [Nm]	Release t_1 [ms]	Braking t_2 [ms]	W_{max} [J] 10 s/h	100 s/h	1000 s/h	W [MJ]	P [VA]
FA 02	3.5	4	20	4500	1400	180	15	60
FA 03	7.5	4	40	7000	1900	230	25	80
FA 04 / **FA 14**	15	6	60	10000	3100	350	30	110
FA 05 / **FA 15**	40	8	90	18000	4500	500	50	250
FA 06S	60	16	120	20000	4800	550	70	470
FA 06	75	16	140	29000	7400	800	80	550
FA 07	150	16	180	40000	9300	1000	130	600
FA 08	250	20	200	60000	14000	1500	230	1200

M_b = max static braking torque (±15%)
t_1 = brake release time
t_2 = brake engagement time
W_{max} = max energy per brake operation (brake thermal capacity)
W = braking energy between two successive air gap adjustments
P_b = power drawn by brake at 20° (50 Hz)
s/h = starts per hour

NOTE
Values t_1 and t_2 in the table refer to a brake set at rated torque, medium air gap and rated voltage.

The brake pad wear depends on the operating/ambient conditions (temperature, humidity, angular speed, specifica pressure); Therefore the declared wear rate must be considered as indicative.

M7.4 FA brake connections

The diagram below shows the wiring when brake is connected directly to same power supply of the motor:

(F 39)

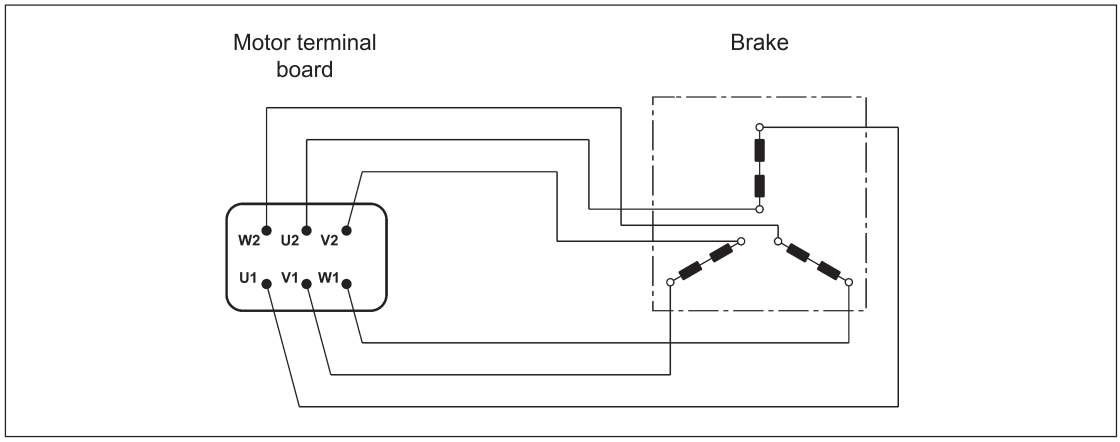

Switch-pole motors and, at request, single-pole motors with separate power supply are equipped with an auxiliary terminal board with 6 terminals for brake connection.
In this version, motors feature a larger terminal box. See diagram below:

(F 40)

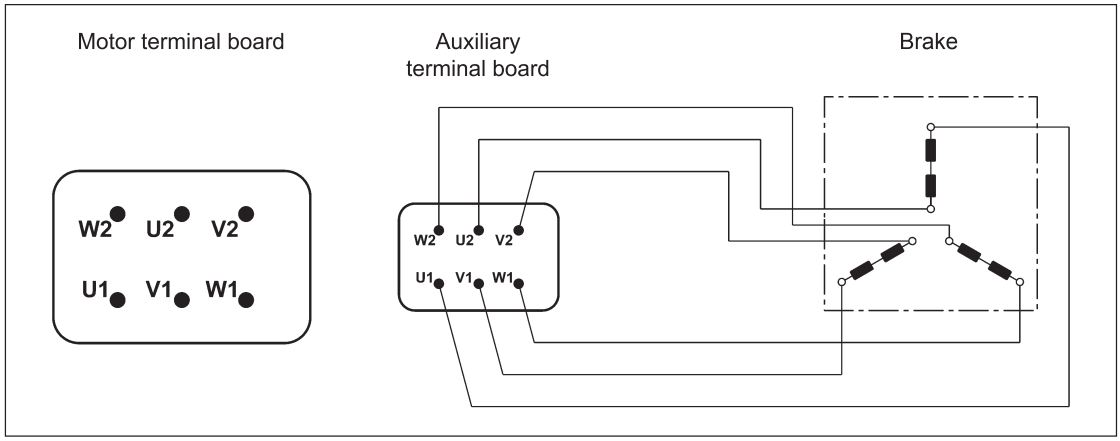

M8 BRAKE RELEASE SYSTEMS

Spring-applied brakes type FD and FA may be equipped with optional manual release devices. These are typically used for manually releasing the brake before servicing any machine or plant parts operated by the motor.

R

(F 41)

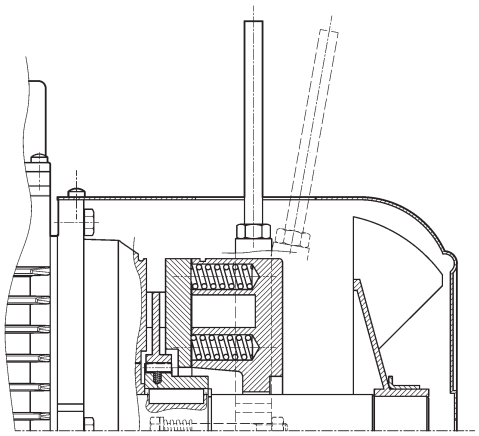

A return spring brings the release lever back in the original position.

RM

(F 42)

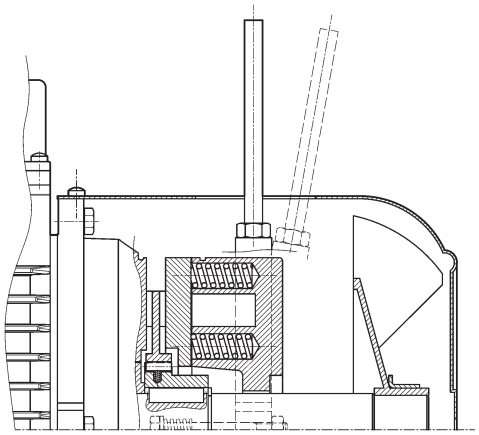

On brake motors type FD, if the option RM is specified, the release device may be locked in the ”release” position by tightening the lever until its end becomes engaged with a brake housing projection. The availability for the various disengagement devices is charted here below:

(F 43)

	R	RM
BN_FD	BN 63...BN 200	2p 63A2 ≤ H ≤ 132M2 4p 63A4 ≤ H ≤ 132MA4 6p 63A6 ≤ H ≤ 132MA6
M_FD	M 05...M 5	M 05...M 4LA
BN_FA	BN 63...BN 180M	⛔
M_FA	M 05...M 5	

M8.1 Release lever orientation

Unless otherwise specified, the release lever is located 90° away from the terminal box – identified by letters [**AB**] in the diagram below – in a clockwise direction on both options **R** and **RM**.
Alternative lever positions [**AA**], [**AC**] and [**AD**] are also possible when the corresponding option is specified:

(F 44)

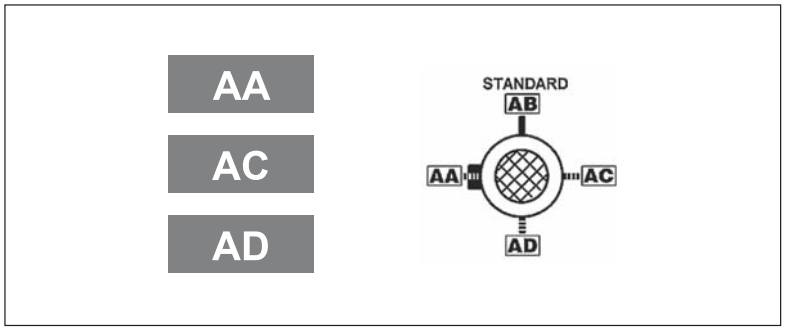

M8.2 Separate brake supply

...SA

The brake coil is directly fed through an independent line, separately from the motor.
In this case the rated voltage for the coil must be specified, e.g.230SA. The option is applicable to all motors with brake type FD and FA.

...SD

The brake coil is directly fed with DC current and the rectifier is out of the scope for supply.
The rated voltage for the coil must be specified, e.g. 24SD.

M8.3 Fly-wheel data (F1)

The table below shows values of weight and inertia of flywheel (option F1). Overall dimensions of motors remain unchanged.

(F 45)

Main data for flywheel of motore type: BN_FD, M_FD			
		**Fly-wheel weight** [Kg]	**Fly-wheel inertia** [Kgm^2]
BN 63	**M05**	0.69	0.00063
BN 71	**M1**	1.13	0.00135
BN 80	**M2**	1.67	0.00270
BN 90 S - BN 90 L	**–**	2.51	0.00530
BN 100	**M3**	3.48	0.00840
BN 112	**–**	4.82	0.01483
BN 132 S - BN 132 M	**M4**	6.19	0.02580

M9 OPTIONS

M9.1 Thermal protective devices

In addition to the standard protection provided by the magneto-thermal device, motors can be supplied with built-in thermal probes to protect the winding against overheating caused, by insufficient ventilation or by an intermittent duty.
This additional protection should always be specified for servoventilated motors (IC416).

M9.2 Capacitive filter

CF

An optional capacitive filter is available for brake motors type FD only. When the suitable capacitive filter is installed upstream of the rectifier (option CF), motors comply with the emission limits required by standard EN61000-6-3:2007“ Electromagnetic Compatibility – Generic Emission Standard – Part 6-3: Residential, commercial and light industrial environment”.

M9.3 Thermistors

E3

These are semi-conductors having rapid resistance variation when they are close to the rated switch off temperature (150 °C).
Variations of the R = f(T) characteristic are specified under DIN 44081, IEC 34-11 Standards.
Positive temperature coefficient thermistors are normally used (also known as PTC “cold conductor resistors”).
Thermistors cannot control relays directly and must be connected to a suitable disconnect device.
Thus protected, three PTCs connected in series are installed in the winding, the terminals of which are located on the auxiliary terminal-board.

K1

The design characteristics of this sub-group of PTC thermistors allow them to be used as positive temperature coefficient sensors with variable resistance.
Functioning temperature range: 0°C ... +260°C.
Thermistors cannot control relays directly and must be connected to a suitable disconnect device.
Terminals (polarised) for 1 x KTY 84-130 are provided on an auxiliary terminal strip.

M9.4 Bimetallic thermostates

D3

These types of protective devices house a bimetal disk. When the rated switch off temperature (150 °C) is reached, the disk switches the contacts from their initial rest position.
As temperature falls, the disk and the contacts automatically return to rest position.
Three bimetallic thermostates connected in series are usually employed, with normally closed contacts. The terminals are located on an auxiliary terminal-board.

M9.5 Plug connector

CON

Three types of connectors (CON 1, CON 2, CON 3) are provided; they can be mounted in two different positions: right side of terminal box cover (C1D, C2D, C3D); left side of terminal box cover (C1S, C2S, C3S).
The option CON is applicable to single speed BN and M motors (2, 4, 6, 8 poles), and it is not applicable to switch-pole motors. More details about the motor sizes are available in the next table.
The connectors CON 1 / CON 2 are available for BN and M motors without brake and for brakemotors equipped with DC brake type FD, for the motor sizes listed below.
The male connector (with pins) is mounted on the motor, the female connector is not provided. With CON option, the winding connection is always Y.
With option U1 “forced ventilation”, the fan unit supply is available inside the separate terminal box fixed to fan cover.
With options EN1...EN6, the encoder connection is made by a cable not connected to the motor plug connector.
The CON option is not applicable to brakemotors equipped with AC brake type FA. The CON option is not available when at least one of the next options are selected: the U2, CUS, IC.

Specifications

(F 46)

Option	**CON 1**
Motor size	**BN63…BN112 / M05...M3**
Connector view	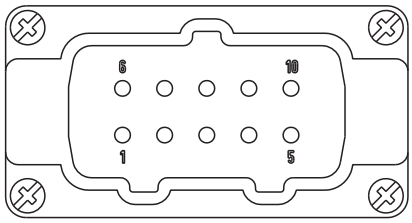
Type of connector	Harting Han 10ES
Housing	Han EMC 10B with 2 levers
Numbers of pins - nominal current	10 x 16A
Voltage	500 Vac
Contact connection	Screw terminals

(F 47)

Option	CON 2
Motor size	**BN63…BN160MR / M05...M4L**
Connector view	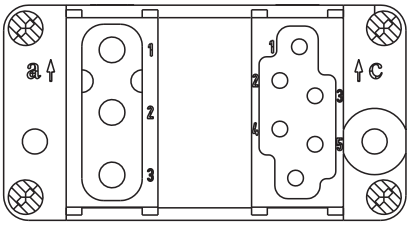
Type of connector	Harting Han Modular
Housing	Han EMC 10B with 2 levers
Module type	Module C + Empty module + Module E
Numbers of pins - nominal current	3 x 36A / 6 x 16A
Voltage	500 Vac
Contact connection	Crimping contacts

(F 48)

Option	CON 3
Motor size	**BN63…BN160M / M05...M4L**
Connector view	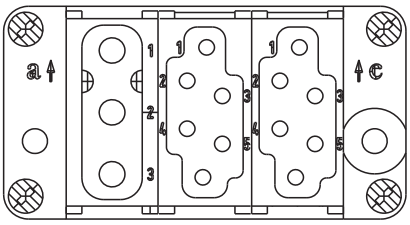
Type of connector	Harting Han Modular
Housing	Han EMC 10B with 2 levers
Module type	Module C + Module E + Module E
Numbers of pins - nominal current	3 x 36A / 6 + 6 x 16A
Voltage	500 Vac
Contact connection	Crimping contacts

(F 49)

Connector orientation
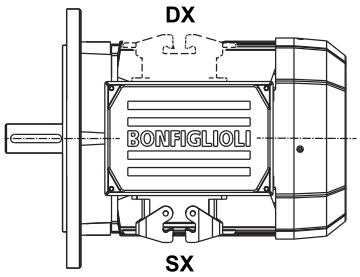

(F 50)

Motors without brake dimensions

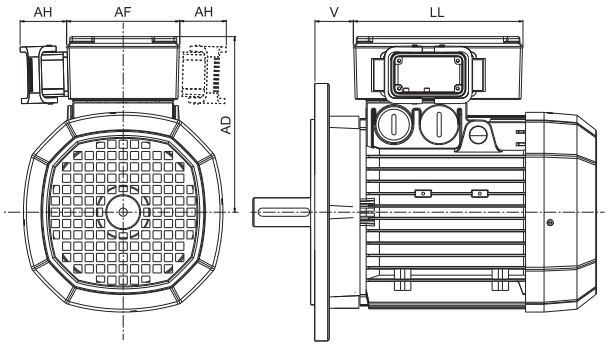

		AD (mm)	**AF** (mm)	**AH** (mm)	**LL** (mm)	**V**(*) (mm)
BN63	**M05**	136	110	45	165	4.5
BN71	**M1**	149	110	45	165	15.5
BN80	**M2**	160	110	45	165	16.5
BN90	**—**	162	110	45	165	31.5
BN100	**M3**	171	110	45	165	37.5
BN112	**—**	186	110	45	165	39
BN132	**M4**	210	140	45	188	45.5
BN160MR	**—**	210	140	45	188	161

(*) Dimension valid only for motors BN.

(F 51)

Motors with FD brake dimensions

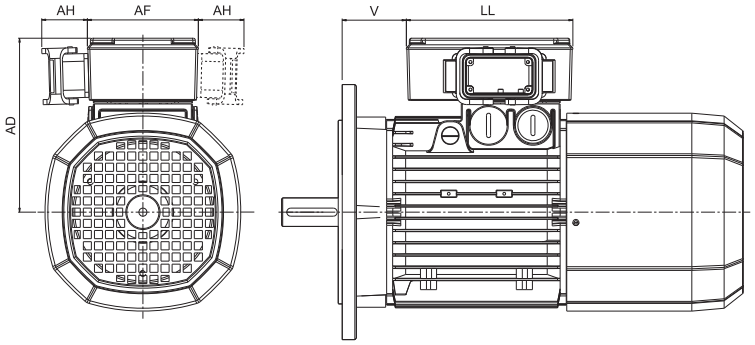

		AD (mm)	**AF** (mm)	**AH** (mm)	**LL** (mm)	**V**(*) (mm)
BN63	**M05**	136	110	45	165	4.5
BN71	**M1**	149	110	45	165	1.5
BN80	**M2**	160	110	45	165	18.5
BN90	**—**	162	110	45	165	39.5
BN100	**M3**	171	110	45	165	63.5
BN112	**—**	186	110	45	165	75
BN132	**M4**	210	140	45	188	122
BN160MR	**—**	210	140	45	188	161

(*) Dimension valid only for motors BN.

M9.6 Control of brake operation

MSW

The microswitch can be set in order to obtain from it a signal related to the attraction/release of anchor plate, or it can be set in order to give feedback when the air gap reaches the maximum value.
MSW option is available for brakes FD03...FD09.
The microswitch is provided with three lead wires (NC, NO, COM). The next figure shown the main components of the brake equipped with microswitch.

(F 52)

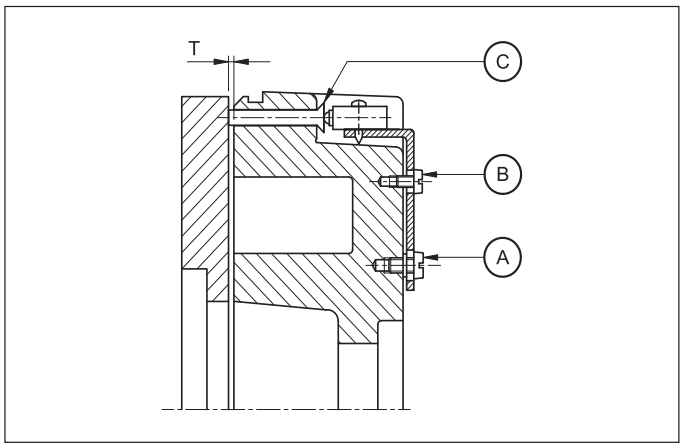

A: Plate fixing screws
B: Setting screws
C: Actuator control pin

M9.7 Additional cable entry for brakemotors

IC

The terminal box cover of brakemotors BN63...BN160MR / M05...M4 is provided with two additional cable entry M16 x 1.5 (one cable entry per side).
The terminal box cover of brakemotors BN160...BN200 / M5 is provided with an additional cable entry M16 x 1.5 next to the cable entry used for the brake.

M9.8 Anti-condensation heaters

H1 **NH1**

Where an application involves high humidity or extreme temperature fluctuation, motors may be equipped with an anti-condensate heater.
A single-phase power supply is available in the auxiliary terminal board inside the main terminal box.
Values for the absorbed power are listed here below:

(F 53)

		H1	NH1
		1~ 230V ± 10% P [W]	1~ 115V ± 10% P [W]
BN 56...BN 80	**M0...M2**	10	10
BN 90...BN 160MR	**M3 - M4**	25	25
BN 160M...BN 180M	**M5**	50	50
BN 180L...BN 200L	**—**		

Warning!
Always remove power supply to the anti-condensante hea- ter before operating the motor.

M9.9 Tropicalization

TP

When option **TP** is specified, motor windings receive additional protection for operation in high humidity and temperature conditions.

M9.10 Second shaft extension

PS

This option is not compatible with variants RC, TC, U1, U2, EN1, EN2, EN3, EN4, EN5, EN6.
For shaft dimensions please see motor dimensions tables.

(F 54)

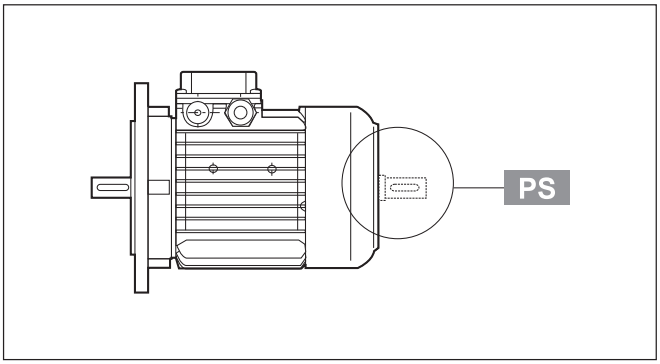

M9.11 Backstop device

AL **AR**

For applications where backdriving must be avoided, motors equipped with an anti run-back device can be used (available for the M series only). While allowing rotation in the direction required, this device operates instantaneously in case of a power failure, preventing the shaft from running back. The anti run-back device is life lubricated with special grease for this specific application. When ordering, customers should indicate the required rotation direction, AL or AR.
Never use the anti run-back device to prevent reverse rotation caused by faulty electrical connection. Table (F55) shows rated and maximum locking torques for the anti run-back devices. A diagram of the device can be seen in Table (F56). Overall dimensis are same as the corresponding brake motor. The direction of free rotation is described in the “MOTOR OPTIONS” section of specifically dedicated sections to gear units.

(F 55)

	Rated locking torque [Nm]	Max. locking torque [Nm]	Release speed [min^{-1}]
M1	6	10	750
M2	16	27	650
M3	54	92	520
M4	110	205	430

(F 56)

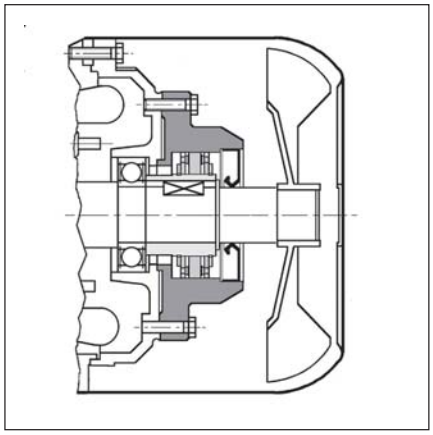

M9.12 Ventilation

Motors are cooled through outer air blow (IC 411 according to CEI EN 60034-6) and are equipped with a plastic radial fan, which operates in both directions.
Ensure that fan cover is installed at a suitable distance from the closest wall so to allow air circulation and servicing of motor and brake, if fitted.
On request, motors can be supplied with independently power-supplied forced ventilation system starting from BN 71 or M1 size.
Motor is cooled by an axial fan with independent power supply and fitted on the fan cover (IC 416 cooling system).
This version is used in case of motor driven by inverter so that steady torque operation is possible even at low speed or when high starting frequencies are needed.
Brake all motors with rear shaft projection (PS option) are excluded.

(F 57)

Power supply					
		V a.c. ± 10%	**Hz**	**P** [W]	**I** [A]
BN 71	**M1**	1~ 230	50 / 60	22	0.12
BN 80	**M2**			22	0.12
BN 90	**—**			40	0.30
BN 100 (*)	**M3**			50	0.25
BN 112	**—**	3~ 230 Δ / 400Y		50	0.26 / 0.15
BN 132S	**M4S**			110	0.38 / 0.22
BN 132M...BN 160MR	**M4L**				
BN 160...BN 180M	**M5**		50	180	1.25 / 0.72

This variant has two different models, called **U1** and **U2**, having the same longitudinal size. Longer side of fan cover (**DL**) is specified for both models in the table below. Overall dimension can be reckoned from motor size table.

(F 58)

Extra length for servoventilated motors			
		Δ L_1	**Δ L_2**
BN 71	**M1**	93	32
BN 80	**M2**	127	55
BN 90	**—**	131	48
BN 100	**M3**	119	28
BN 112	**—**	130	31
BN 132S	**M4S**	161	51
BN 132M	**M4L**	161	51

ΔL_1 = extra length to LB value of corresponding standard motor
ΔL_2 = extra length to LB value of corresponding brake motor

U1

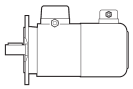

Fan wiring terminals are housed in a separate terminal box.
In brake motors of size BN 71...BN 160MR, M1...M4L, with **U1** model, the release lever cannot be positioned to AA.
The option is not applicable to motors compliant with the CSA and UL norms (option CUS).

U2

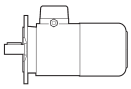

Fan terminals are wired in the motor terminal box.
The **U2** option does not apply to motors BN 160 through BN 200L, M5, with the only exception of motor BN 160MR for which the option is available instead and to motors with option CUS (ompliant to norms CSA and UL).

(F 59)

		V a.c. ±10%	**Hz**	**P** [W]	**I** [A]
BN 71	**M1**	1 ~ 230	50 / 60	22	0.12
BN 80	**M2**			22	0.12
BN 90	**–**			40	0.30
BN 100	**M3**	3 ~ 230Δ / 400Y		40	0.26 / 0.09
BN 112	**–**			50	0.26 / 0.15
BN 132 ... BN 160MR	**M4L**			110	0.38 / 0.22

M9.13 Rain canopy

RC

The rain canopy protects the motor from dripping and avoids the ingress of solid bodies. It is recommended when motor is installed in a vertical position with the shaft downwards.
Relevant dimensions are indicated in the table below.
The drip cover is not compatible with variants PS, EN1, EN2, EN3, EN4, EN5, EN6.

(F 60)

		AQ	ΔV	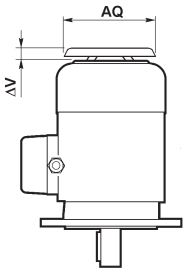
BN 63	**M05**	118	24	
BN 71	**M1**	134	27	
BN 80	**M2**	152	25	
BN 90	**—**	168	30	
BN 100	**M3**	190	28	
BN 112	**—**	211	32	
BN 132...BN 160MR	**M4**	254	32	
BN 160M...BN 180M	**M5**	302	36	
BN 180L...BN 200L	**—**	340	36	

M9.14 Textile canopy

TC

Option TC is a cover variant for textile industry environments, where lint may obstruct the fan grid and prevent a regular flow of cooling air.
This option is not compatible with variants EN1, EN2, EN3, EN4, EN5, EN6.
Overall dimensions are the same as drip cover type RC.

M9.15 Feedback units

Motors may be combined with six different types of encoders to achieve feedback circuits.
Configurations with double-extended shaft (PS) and rain canopy (RC, TC) are not compatible with encoder installation.

EN1

Incremental encoder, V_{IN} = 5 V, line-driver output RS 422.

EN2

Incremental encoder, V_{IN} = 10-30 V, line-driver output RS 422.

EN3

Incremental encoder, V_{IN} = 12-30 V, push-pull output 12-30 V

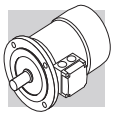

EN4

Encoder sin/cos, V_{IN} = 4.5-5.5 V, output Sinus $0.5V_{PP}$.

EN5

Absolute encoder singleturn, HIPERFACE® interface, V_{IN} = 7-12 V.

EN6

Absolute encoder multiturn, HIPERFACE® interface, V_{IN} = 7-12 V.

(F 61)

		EN1	EN2	EN3	EN4	EN5	EN6
Interface		TTL/RS 422	TTL/RS 422	HTL/push-pull	Sinus 0.5 VPP	HIPERFACE®	HIPERFACE®
Power supply voltage	[V]	4...6	10...30	12...30	4.4...5.5	7...12	7...12
Output voltage	[V]	5	5	12...30	—	—	—
No-load operating current	[mA]	120	100	100	40	80	80
No. of pulses per revolution		1024					
Steps per revolution		—	—	—	—	15 bit	15 bit
Revolutions		—	—	—	—	—	12 bit
No. of signals		6 (A, B, Z + inverted signals)			6 (cos-, cos+, sin-, sin+, Z, $\overline{Z}$)	—	—
Max. output frequency	[kHz]	600			200		
Max. speed	[min^{-1}]	6000 (9000 min^{-1} for 10 s)					
Working temperature range	[°C]	-30 ... +100					
Protection class		IP 65					

(F 63)

EN1, EN2, EN3, EN4, EN5, EN6	
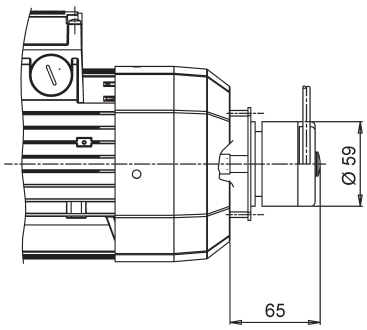	
BN 63...BN 200L	**M05...M5**
BN 63_FD...BN 200L_FD	**M05_FD...M5_FD**
BN 63_FA...BN 200L_FA	**M05_FA...M5_FA**

(F 62)

EN_ + U1		
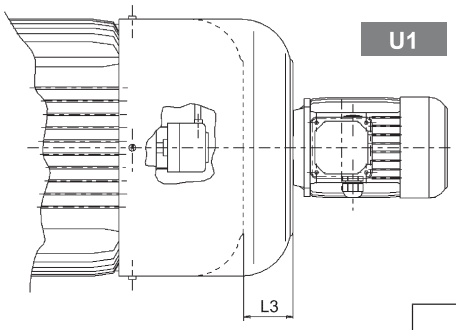		
		L3
BN 160M...BN 180M	**M5**	72
BN 180L...BN 200L	**-**	82
BN 160M_FD...BN 180M_FD	**M5_FD**	35
BN 180L_FD...BN 200L_FD	**-**	41

If the encoder device (option EN_) is specified on motors BN71...BN160MR / M1...M4, along with the independent fan cooling (options U1, U2), the extra length of motor is coincident with that of the correspondent U1 and U2 execution.

M9.16 Surface protection

C_

When no specific protection class is requested, the painted (ferrous) surfaces of motors are protected to at least corrosivity class C2 (UNI EN ISO 12944-2). For improved resistance to atmospheric corrosion, motors can be delivered with C3 and C4 surface protection.

SURFACE PROTECTION	Typical environments	Maximum surface temperature	Corrosivity class according to UNI EN ISO 12944-2
C3	Urban and industrial environments with up to 100% relative humidity (medium air pollution)	120°C	C3
C4	Industrial areas, coastal areas, chemical plant, with up to 100% relative humidity (high air pollution)	120°C	C4

Motors with optional protection to class C3 or C4 are available in a choice of colours. If no specific colour is requested (see the “PAINTING” option) motors are finished in RAL 7042.
Motors can also be supplied with surface protection for corrosivity class C5 according to UNI EN ISO 12944-2. Contact our Technical Service for further details.

M9.17 Painting

RAL_

Gearboxes with optional protection to class C3 or C4 are available in the colours listed in the following table.

PAINTING	Colour	RAL number
RAL7042*	Traffic Grey A	7042
RAL5010	Gentian Blue	5010
RAL9005	Jet Black	9005
RAL9006	White Aluminium	9006
RAL9010	Pure White	9010

* Gearboxes are supplied in this standard colour if no other colour is specified.

NOTE – “PAINTING” options can only be specified in conjunction with “SURFACE PROTECTION” options.

M9.18 Certificates

ACM

Certificate of compliance of motors
The document certifies the compliance of the product with the purchase order and the construction in conformity with the applicable procedures of the Bonfiglioli Quality System.

CC

Inspection certificate
The document entails checking on order compliance, the visual inspection of external conditions and instrumental testing of the electrical characteristics in unloaded conditions. Units inspected are sampled within the shipping batch and marked individually.

2P — 3000 min-1 - S1 — 50 Hz

P_n kW			n min-1	M_n Nm	IE1	η (100%) %	η (75%) %	η (50%) %	cosφ	In 400V A	Is/In	Ms/Mn	Ma/Mn	J_m x 10^{-4} kgm²	IM B5 Kg	d.c. brake FD Mod	Mb Nm	Z_o 1/h NB	Z_o 1/h SB	J_m x 10^{-4} kgm²	IM B5 Kg	a.c. brake FA Mod	Mb Nm	Z_o 1/h	J_m x 10^{-4} kgm²	IM B5 Kg
0.18	BN 63A	2	2730	0.63	○	59.9	56.9	51.9	0.77	0.56	3.0	2.1	2.0	2.0	3.5	FD 02	1.75	3900	4800	2.6	5.2	FA 02	1.75	4800	2.6	5.0
0.25	BN 63B	2	2740	0.87	○	66.0	64.8	64.8	0.76	0.72	3.3	2.3	2.3	2.3	3.9	FD 02	1.75	3900	4800	3.0	5.6	FA 02	1.75	4800	3.0	5.4
0.37	BN 63C	2	2800	1.26	○	69.1	66.8	66.8	0.78	0.99	3.9	2.6	2.6	3.3	5.1	FD 02	3.5	3600	4500	3.9	6.8	FA 02	3.5	4500	3.9	6.6
0.37	BN 71A	2	2820	1.25	○	73.8	73.0	70.6	0.76	0.95	4.8	2.8	2.6	3.5	5.4	FD 03	3.5	3000	4100	4.6	8.1	FA 03	3.5	4200	4.6	7.8
0.55	BN 71B	2	2820	1.86	○	76.0	75.8	74.8	0.76	1.37	5.0	2.9	2.8	4.1	6.2	FD 03	5	2900	4200	5.3	8.9	FA 03	5	4200	5.3	8.6
0.75	BN 71C	2	2810	2.6	○	76.6	76.2	76.2	0.76	1.86	5.1	3.1	2.8	5.0	7.3	FD 03	5	1900	3300	6.1	10.0	FA 03	5	3600	6.1	9.7
0.75	BN 80A	2	2810	2.6	•	76.2	75.5	68.3	0.81	1.75	4.8	2.6	2.2	7.8	8.6	FD 04	5	1700	3200	9.4	12.5	FA 04	5	3200	9.4	12.4
1.1	BN 80B	2	2800	3.8	•	76.4	76.2	75.0	0.81	2.57	4.8	2.8	2.4	9.0	9.5	FD 04	10	1500	3000	10.6	13.4	FA 04	10	3000	10.6	13.3
1.5	BN 80C	2	2800	5.1	•	79.1	79.5	77.2	0.81	3.4	4.9	2.7	2.4	11.4	11.3	FD 04	15	1300	2600	13.0	15.2	FA 04	15	2600	13.0	15.1
1.5	BN 90SA	2	2870	5.0	•	82.0	81.5	78.1	0.80	3.4	5.9	2.7	2.6	12.5	12.3	FD 14	15	900	2200	14.1	16.5	FA 14	15	2200	14.1	16.4
1.85	BN 90SB	2	2880	6.1	•	82.5	82.0	75.4	0.80	4.0	6.2	2.9	2.6	16.7	14	FD 14	15	900	2200	18.3	18.2	FA 14	15	2200	18.3	18.1
2.2	BN 90L	2	2880	7.3	•	82.7	82.1	80.8	0.80	4.8	6.3	2.9	2.7	16.7	14	FD 05	26	900	2200	21	20	FA 05	26	2200	21	20.7
3	BN 100L	2	2860	10.0	•	81.5	81.3	77.4	0.79	6.7	5.6	2.6	2.2	31	20	FD 15	26	700	1600	35	26	FA 15	26	1600	35	27
4	BN 100LB	2	2870	13.3	•	83.1	83.0	77.8	0.80	8.7	5.8	2.7	2.5	39	23	FD 15	40	450	900	43	29	FA 15	40	1000	43	30
4	BN 112M	2	2900	13.2	•	85.5	84.5	83.0	0.82	8.2	6.9	3.0	2.9	57	28	FD 06S	40	—	950	66	39	FA 06S	40	950	66	40
5.5	BN 132SA	2	2890	18.2	•	84.7	84.5	81.2	0.84	11.2	5.9	2.6	2.2	101	35	FD 06	50	—	600	112	48	FA 06	50	600	112	49
7.5	BN 132SB	2	2900	25	•	86.5	86.3	84.4	0.85	14.7	6.4	2.6	2.2	145	42	FD 06	50	—	550	154	55	FA 06	50	550	154	56
9.2	BN 132M	2	2930	30	•	87.0	86.5	83.6	0.86	17.7	6.7	2.8	2.3	178	53	FD 56	75	—	430	189	66	FA 06	75	430	189	67
11	BN 160MR	2	2920	36	•	87.6	87.0	86.0	0.88	20.6	6.9	2.9	2.5	210	65											
15	BN 160MB	2	2930	49	•	89.6	89.4	88.0	0.86	28.1	7.1	2.6	2.3	340	84											
18.5	BN 160L	2	2930	60	•	90.4	90.1	89.0	0.86	34	7.6	2.7	2.3	420	97											
22	BN 180M	2	2930	72	•	89.9	89.7	89.5	0.88	40	7.8	2.6	2.4	490	109											
30	BN 200LA	2	2930	98	•	90.7	90.1	87.6	0.89	54	7.8	2.7	2.9	770	140											

○ = n.a. • = IE1

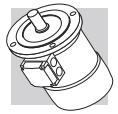

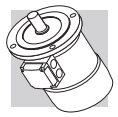

4P — 1500 min^{-1} - S1 — 50 Hz

P_n kW			n min^{-1}	M_n Nm	IE1	η (100%) %	η (75%) %	η (50%) %	cosφ	In 400V A	Is/In	Ms/Mn	Ma/Mn	J_m x 10^{-4} kgm^2	IM B5 Kg	d.c. brake FD Mod	Mb Nm	Z_o 1/h NB	Z_o 1/h SB	J_m x 10^{-4} kgm^2	IM B5 Kg	a.c. brake FA Mod	Mb Nm	Z_o 1/h	J_m x 10^{-4} kgm^2	IM B5 Kg
0.06	**BN 56A**	**4**	1340	0.43	○	46.8	44.2	41.3	0.65	0.28	2.6	2.3	2.0	1.5	3.1											
0.09	**BN 56B**	**4**	1350	0.64	○	51.7	47.6	42.9	0.60	0.42	2.6	2.5	2.4	1.5	3.1											
0.12	**BN 63A**	**4**	1350	0.85	○	59.8	56.2	47.0	0.62	0.47	2.6	1.9	1.8	2.0	3.5	**FD 02**	1.75	10000	13000	2.6	5.2	**FA 02**	1.75	13000	2.6	5.0
0.18	**BN 63B**	**4**	1320	1.30	○	54.8	52.9	52.5	0.67	0.71	2.6	2.2	2.0	2.3	3.9	**FD 02**	3.5	10000	13000	3.0	5.6	**FA 02**	3.5	13000	3.0	5.4
0.25	**BN 63C**	**4**	1340	1.78	○	65.3	65.0	57.9	0.69	0.80	2.7	2.1	1.9	3.3	5.1	**FD 02**	3.5	7800	10000	3.9	6.8	**FA 02**	3.5	10000	3.9	6.6
0.25	**BN 71A**	**4**	1380	1.73	○	63.7	62.2	59.1	0.73	0.78	3.3	1.9	1.7	5.8	5.1	**FD 03**	3.5	7700	11000	6.9	7.8	**FA 03**	3.5	11000	6.9	7.5
0.37	**BN 71B**	**4**	1370	2.6	○	66.8	66.7	63.0	0.76	1.05	3.7	2.0	1.9	6.9	5.9	**FD 03**	5	6000	9400	8.0	8.6	**FA 03**	5.0	9400	8.0	8.3
0.55	**BN 71C**	**4**	1380	3.8	○	69.0	68.9	68.8	0.74	1.55	4.1	2.3	2.3	9.1	7.3	**FD 53**	7.5	4300	8700	10.2	10.0	**FA 03**	7.5	8700	10.2	9.7
0.55	**BN 80A**	**4**	1390	3.8	○	72.0	71.3	69.7	0.77	1.43	4.1	2.3	2.0	15	8.2	**FD 04**	10	4100	8000	16.6	12.1	**FA 04**	10	8000	16.6	12.0
0.75	**BN 80B**	**4**	1400	5.1	•	75.0	74.5	69.3	0.78	1.85	4.9	2.7	2.5	20	9.9	**FD 04**	15	4100	7800	22	13.8	**FA 04**	15	7800	22	13.7
1.1	**BN 80C**	**4**	1400	7.5	•	75.5	76.2	70.4	0.78	2.7	5.1	2.8	2.5	25	11.3	**FD 04**	15	2600	5300	27	15.2	**FA 04**	15	5300	27	15.1
1.1	**BN 90S**	**4**	1390	7.6	•	76.5	76.2	72.2	0.77	2.70	4.6	2.6	2.2	21	12.2	**FD 14**	15	4800	8000	23	16.4	**FA 14**	15	8000	23	16.3
1.5	**BN 90LA**	**4**	1410	10.2	•	78.7	78.5	74.9	0.77	3.6	5.3	2.8	2.4	28	13.6	**FD 05**	26	3400	6000	32	19.6	**FA 05**	26	6000	32	20.3
1.85	**BN 90LB**	**4**	1390	12.7	•	78.6	78.9	77.2	0.79	4.3	5.1	2.8	2.6	30	15.1	**FD 05**	26	3200	5900	34	21.1	**FA 05**	26	5900	34	21.8
2.2	**BN 100LA**	**4**	1410	14.9	•	81.1	81.4	79.9	0.75	5.2	4.5	2.2	2.0	40	18	**FD 15**	40	2600	4700	44	25	**FA 15**	40	4700	44	25
3	**BN 100LB**	**4**	1410	20	•	82.6	83.8	83.7	0.77	6.8	5.0	2.3	2.2	54	22	**FD 15**	40	2400	4400	58	28	**FA 15**	40	4400	58	29
4	**BN 112M**	**4**	1430	27	•	84.4	84.2	81.6	0.81	8.4	5.6	2.7	2.5	98	30	**FD 06S**	60	—	1400	107	40	**FA 06S**	60	2100	107	42
5.5	**BN 132S**	**4**	1440	36	•	84.7	84.8	82.5	0.81	11.6	5.5	2.3	2.2	213	44	**FD 56**	75	—	1050	223	57	**FA 06**	75	1200	223	58
7.5	**BN 132MA**	**4**	1440	50	•	86.0	86.3	85.3	0.81	15.5	5.7	2.5	2.4	270	53	**FD 06**	100	—	950	280	66	**FA 07**	100	1000	280	71
9.2	**BN 132MB**	**4**	1440	61	•	88.4	88.6	87.5	0.81	18.8	5.9	2.7	2.5	319	59	**FD 07**	150	—	900	342	75	**FA 07**	150	900	342	77
11	**BN 160MR**	**4**	1440	73	•	87.6	87.8	86.0	0.81	22.4	6.0	2.7	2.5	360	70	**FD 07**	150	—	850	382	86	**FA 07**	150	850	382	88
15	**BN 160L**	**4**	1460	98	•	88.7	88.5	88.4	0.81	30	6.0	2.3	2.1	650	99	**FD 08**	200	—	750	725	129	**FA 08**	200	750	710	128
18.5	**BN 180M**	**4**	1460	121	•	89.3	89.5	89.2	0.81	37	6.2	2.6	2.5	790	115	**FD 08**	250	—	700	865	145	**FA 08**	250	700	850	144
22	**BN 180L**	**4**	1460	144	•	89.9	90.0	90.0	0.80	44	6.4	2.5	2.5	1250	135	**FD 09**	300	—	400	1450	175					
30	**BN 200L**	**4**	1460	196	•	91.4	91.7	91.0	0.80	59	7.1	2.7	2.8	1650	157	**FD 09**	400	—	300	1850	197					

○ = n.a. • = IE1

6P — 1000 min^{-1} - S1 — 50 Hz

P_n kW			n min^{-1}	M_n Nm	IE1	η (100%) %	η (75%) %	η (50%) %	cosφ	In 400V A	Is/In	Ms/Mn	Ma/Mn	J_m x 10^{-4} kgm^2	IM B5 Kg	d.c. brake FD Mod	Mb Nm	Z_o 1/h NB	Z_o 1/h SB	J_m x 10^{-4} kgm^2	IM B5 Kg	a.c. brake FA Mod	Mb Nm	Z_o 1/h	J_m x 10^{-4} kgm^2	IM B5 Kg
0.09	BN 63A	6	880	0.98	○	41.0	41.0	32.9	0.53	0.60	2.1	2.1	1.8	3.4	4.6	FD 02	3.5	9000	14000	4.0	6.3	FA 02	3.5	14000	4.0	6.1
0.12	BN 63B	6	870	1.32	○	45.0	44.0	41.8	0.60	0.64	2.1	1.9	1.7	3.7	4.9	FD 02	3.5	9000	14000	4.3	6.6	FA 02	3.5	14000	4.3	6.4
0.18	BN 71A	6	900	1.91	○	55.0	55.5	51.0	0.69	0.68	2.6	1.9	1.7	8.4	5.5	FD 03	5	8100	13500	9.5	8.2	FA 03	5.0	13500	9.5	7.9
0.25	BN 71B	6	900	2.70	○	62.0	58.5	51.4	0.71	0.82	2.6	1.9	1.7	10.9	6.7	FD 03	5	7800	13000	12	9.4	FA 03	5.0	13000	12	9.1
0.37	BN 71C	6	910	3.9	○	66.0	60.0	53.3	0.69	1.17	3.0	2.4	2.0	12.9	7.7	FD 53	7.5	5100	9500	14	10.4	FA 03	7.5	9500	14	10.1
0.37	BN 80A	6	910	3.9	○	68.0	67.4	63.3	0.68	1.15	3.2	2.2	2.0	21	9.9	FD 04	10	5200	8500	23	13.8	FA 04	10	8500	23	13.7
0.55	BN 80B	6	920	5.7	○	70.0	69.8	64.3	0.68	1.67	3.9	2.6	2.2	25	11.3	FD 04	15	4800	7200	27	15.2	FA 04	15	7200	27	15.1
0.75	BN 80C	6	920	7.8	•	70.0	70.0	64.4	0.65	2.38	3.8	2.5	2.2	28	12.2	FD 04	15	3400	6400	30	16.1	FA 04	15	6400	30	16.0
0.75	BN 90S	6	920	7.8	•	70.0	69.0	64.2	0.68	2.27	3.8	2.4	2.2	26	12.6	FD 14	15	3400	6500	28	16.8	FA 14	15	6500	28	16.7
1.1	BN 90L	6	920	11.4	•	72.9	72.6	69.1	0.69	3.2	3.9	2.3	2.0	33	15	FD 05	26	2700	5000	37	21	FA 05	26	5000	37	22
1.5	BN 100LA	6	940	15.2	•	75.2	74.2	70.3	0.72	4.0	4.1	2.1	2.0	82	22	FD 15	40	1900	4100	86	28	FA 15	40	4100	86	29
1.85	BN 100LB	6	930	19.0	•	76.6	72.8	62.6	0.73	4.8	4.6	2.1	2.0	95	24	FD 15	40	1700	3600	99	30	FA 15	40	3600	99	31
2.2	BN 112M	6	940	22	•	78.5	79.0	76.5	0.73	5.5	4.8	2.2	2.0	168	32	FD 06S	60	—	2100	177	42	FA 06S	60	2100	177	44
3	BN 132S	6	940	30	•	79.7	77.0	75.1	0.76	7.1	5.1	1.9	1.8	216	36	FD 56	75	—	1400	226	49	FA 06	75	1400	226	50
4	BN 132MA	6	950	40	•	81.4	81.5	79.5	0.77	9.2	5.5	2.0	1.8	295	45	FD 06	100	—	1200	305	58	FA 07	100	1200	318	63
5.5	BN 132MB	6	945	56	•	83.1	80.9	79.1	0.78	12.2	6.1	2.1	1.9	383	56	FD 07	150	—	1050	406	72	FA 07	150	1050	406	74
7.5	BN 160M	6	955	75	•	85.0	85.0	84.8	0.81	15.7	5.9	2.2	2.0	740	83	FD 08	170	—	900	815	112	FA 08	170	900	815	113
11	BN 160L	6	960	109	•	86.4	86.5	85.9	0.81	22.7	6.6	2.5	2.3	970	103	FD 08	200	—	800	1045	133	FA 08	200	800	1045	133
15	BN 180L	6	970	148	•	87.7	88.0	87.3	0.82	30	6.2	2.0	2.4	1550	130	FD 09	300	—	600	1750	170					
18.5	BN 200LA	6	960	184	•	88.6	88.0	87.3	0.81	37	5.9	2.0	2.3	1700	145	FD 09	400	—	450	1900	185					

○ = n.a. • = IE1

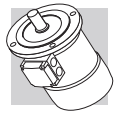

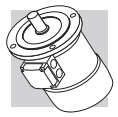

8P — 750 min-1 - S1 — 50 Hz

													d.c. brake						a.c. brake				
													FD						FA				
P_n kW			n min-1	M_n Nm	η %	cosφ	In 400V A	Is/In	Ms/Mn	Ma/Mn	J_m x 10^{-4} kgm²	IM B5 Kg	Mod	Mb Nm	Z_o 1/h NB	Z_o 1/h SB	J_m x 10^{-4} kgm²	IM B5 Kg	Mod	Mb Nm	Z_o 1/h	J_m x 10^{-4} kgm²	IM B5 Kg
0.09	**BN 71A**	**8**	680	1.26	47	0.59	0.47	2.3	2.4	2.3	10.9	6.7	**FD 03**	3.5	9000	16000	12.0	9.4	**FA 03**	3.5	16000	12.0	9.1
0.12	**BN 71B**	**8**	680	1.69	51	0.59	0.58	2.1	2.3	2.2	12.9	7.7	**FD 03**	5.0	9000	16000	14.0	10.4	**FA 03**	5.0	16000	14.0	10.1
0.18	**BN 80A**	**8**	690	2.49	51	0.60	0.85	2.4	2.2	2.2	15	8.2	**FD 04**	5.0	6500	11000	16.6	12.1	**FA 04**	5.0	11000	16.6	12.0
0.25	**BN 80B**	**8**	680	3.51	54	0.63	1.06	2.4	2.0	1.9	20	9.9	**FD 04**	10.0	6000	10000	22	13.8	**FA 04**	10.0	10000	23	13.7
0.37	**BN 90S**	**8**	675	5.2	58	0.60	1.53	2.6	2.3	2.1	26	12.6	**FD 14**	15.0	4800	7500	28	16.8	**FA 14**	15.0	7500	28	16.7
0.55	**BN 90L**	**8**	670	7.8	62	0.60	2.13	2.6	2.2	2.0	33	15	**FD 05**	26	4000	6400	37	21	**FA 05**	26	6400	37	22
0.75	**BN 100LA**	**8**	700	10.2	68	0.63	2.53	3.4	1.9	1.7	82	22	**FD 15**	26	2800	4800	86	28	**FA 15**	26	4800	86	29
1.1	**BN 100LB**	**8**	700	15.0	68	0.64	3.65	3.2	1.7	1.7	95	24	**FD 15**	40	2500	4000	99	30	**FA 15**	40	4000	99	31
1.5	**BN 112M**	**8**	710	20.2	71	0.66	4.6	3.7	1.8	1.9	168	32	**FD 06S**	60	—	3000	177	42	**FA 06S**	60	3000	177	44
2.2	**BN 132S**	**8**	710	29.6	75	0.66	6.4	3.8	1.8	2.0	295	45	**FD 56**	75	—	2300	305	58	**FA 06**	75	2300	305	56
3	**BN 132MA**	**8**	710	40.4	76	0.69	8.3	3.9	1.6	1.8	370	53	**FD 06**	100	—	1900	394	69	**FA 07**	100	1900	406	74

2/4P — 3000/1500 min^{-1} - S1 — 50 Hz

P_n kW			n min^{-1}	M_n Nm	η %	cosφ	In 400V A	Is/In	Ms/Mn	Ma/Mn	J_m x 10^{-4} kgm^2	IM B5 Kg	d.c. brake FD Mod	Mb Nm	Z_o 1/h NB	Z_o 1/h SB	J_m x 10^{-4} kgm^2	IM B5 Kg	a.c. brake FA Mod	Mb Nm	Z_o 1/h	J_m x 10^{-4} kgm^2	IM B5 Kg
0.20	**BN 63B**	**2**	2700	0.71	55	0.82	0.64	3.5	2.1	1.9	2.9	4.4	**FD 02**	3.5	2200	2600	3.5	6.1	**FA 02**	3.5	2600	3.5	5.9
0.15		**4**	1350	1.06	49	0.67	0.66	2.6	1.8	1.7					4000	5100					5100		
0.28	**BN 71A**	**2**	2700	0.99	56	0.82	0.88	2.9	1.9	1.7	4.7	4.4	**FD 03**	3.5	2100	2400	5.8	7.1	**FA 03**	3.5	2400	5.8	6.8
0.20		**4**	1370	1.39	59	0.72	0.68	3.1	1.8	1.7					3800	4800					4800		
0.37	**BN 71B**	**2**	2740	1.29	56	0.82	1.16	3.5	1.8	1.8	5.8	5.1	**FD 03**	5.0	1400	2100	6.9	7.8	**FA 03**	5.0	2100	6.9	7.5
0.25		**4**	1390	1.72	60	0.73	0.82	3.3	2.0	1.9					2900	4200					4200		
0.45	**BN 71C**	**2**	2780	1.55	63	0.85	1.21	3.8	1.8	1.8	6.9	5.9	**FD 03**	5.0	1400	2100	8.0	8.6	**FA 03**	5.0	2100	8.0	8.3
0.30		**4**	1400	2.0	63	0.73	0.94	3.6	2.0	1.9					2900	4200					4200		
0.55	**BN 80A**	**2**	2800	1.9	63	0.85	1.48	3.9	1.7	1.7	15	8.2	**FD 04**	5.0	1600	2300	17	12.1	**FA 04**	5.0	2300	16.6	12.0
0.37		**4**	1400	2.5	67	0.79	1.01	4.1	1.8	1.9					3000	4000					4000		
0.75	**BN 80B**	**2**	2780	2.6	65	0.85	1.96	3.8	1.9	1.8	20	9.9	**FD 04**	10	1400	1600	22	13.8	**FA 04**	10	1600	22	13.7
0.55		**4**	1400	3.8	68	0.81	1.44	3.9	1.7	1.7					2700	3600					3600		
1.1	**BN 90S**	**2**	2790	3.8	71	0.82	2.73	4.7	2.3	2.0	21	12.2	**FD 14**	10	1500	1600	23	16.4	**FA 14**	10	1600	23	16.3
0.75		**4**	1390	5.2	66	0.79	2.08	4.6	2.4	2.2					2300	2800					2800		
1.5	**BN 90L**	**2**	2780	5.2	70	0.85	3.64	4.5	2.4	2.1	28	14.0	**FD 05**	26	1050	1200	32	20	**FA 05**	26	1200	32	21
1.1		**4**	1390	7.6	73	0.81	2.69	4.7	2.5	2.2					1600	2000					2000		
2.2	**BN 100LA**	**2**	2800	7.5	72	0.85	5.2	4.5	2.0	1.9	40	18.3	**FD 15**	26	600	900	44	25	**FA 15**	26	900	44	25
1.5		**4**	1410	10.2	73	0.79	3.8	4.7	2.0	2.0					1300	2300					2300		
3.5	**BN 100LB**	**2**	2850	11.7	80	0.84	7.5	5.4	2.2	2.1	61	25	**FD 15**	40	500	900	65	31	**FA 15**	40	900	65	32
2.5		**4**	1420	16.8	82	0.80	5.5	5.2	2.2	2.2					1000	2100					2100		
4	**BN 112M**	**2**	2880	13.3	79	0.83	8.8	6.1	2.4	2.0	98	30	**FD 06S**	60	—	700	107	40	**FA 06S**	60	700	107	42
3.3		**4**	1420	22.2	80	0.80	7.4	5.1	2.1	2.0					—	1200					1200		
5.5	**BN 132S**	**2**	2890	18.2	80	0.87	11.4	5.9	2.4	2.0	213	44	**FD 56**	75	—	350	223	57	**FA 06**	75	350	223	58
4.4		**4**	1440	29	82	0.84	9.2	5.3	2.2	2.0					—	900					900		
7.5	**BN 132MA**	**2**	2900	25	82	0.87	15.2	6.5	2.4	2.0	270	53	**FD 06**	100	—	350	280	66	**FA 07**	100	350	293	71
6		**4**	1430	40	84	0.85	12.1	5.8	2.3	2.1					—	900					900		
9.2	**BN 132MB**	**2**	2920	30	83	0.86	18.6	6.0	2.6	2.2	319	59	**FD 07**	150	—	300	342	75	**FA 07**	150	300	342	77
7.3		**4**	1440	48	85	0.85	14.6	5.5	2.3	2.1					—	800					800		

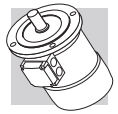

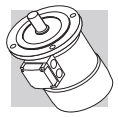

2/6P — 3000/1000 min-1 - S3 60/40% — 50 Hz

													d.c. brake						a.c. brake				
													FD						FA				
P_n kW			n min-1	M_n Nm	η %	cosφ	In 400V A	Is/In	Ms/Mn	Ma/Mn	J_m x 10^{-4} kgm²	IM B5 Kg	Mod	Mb Nm	Z_o 1/h NB	Z_o 1/h SB	J_m x 10^{-4} kgm²	IM B5 Kg	Mod	Mb Nm	Z_o 1/h	J_m x 10^{-4} kgm²	IM B5 Kg
0.25	**BN 71A**	**2**	2850	0.84	60	0.82	0.73	4.3	1.9	1.8	6.9	5.9	**FD 03**	1.75	1500	1700	8.0	8.6	**FA 03**	2.5	1700	8.0	8.3
0.08		**6**	910	0.84	43	0.70	0.38	2.1	1.4	1.5					10000	13000					13000		
0.37	**BN 71B**	**2**	2880	1.23	62	0.80	1.08	4.4	1.9	1.8	9.1	7.3	**FD 03**	3.5	1000	1300	10.2	10.0	**FA 03**	3.5	1300	10.2	9.7
0.12		**6**	900	1.27	44	0.73	0.54	2.4	1.4	1.5					9000	11000					11000		
0.55	**BN 80A**	**2**	2800	1.88	63	0.86	1.47	4.5	1.9	1.7	20	9.9	**FD 04**	5.0	1500	1800	22	13.8	**FA 04**	5.0	1800	22	13.7
0.18		**6**	930	1.85	52	0.65	0.77	3.3	2.0	1.9					4100	6300					6300		
0.75	**BN 80B**	**2**	2800	2.6	66	0.87	1.89	4.3	1.8	1.6	25	11.3	**FD 04**	5.0	1700	1900	27	15.2	**FA 04**	5.0	1900	27	15.1
0.25		**6**	930	2.6	54	0.67	1.00	3.2	1.7	1.8					3800	6000					6000		
1.10	**BN 90L**	**2**	2860	3.7	67	0.84	2.82	4.7	2.1	1.9	28	14.0	**FD 05**	13	1400	1600	32	20	**FA 05**	13	1600	32	21
0.37		**6**	920	3.8	59	0.71	1.27	3.3	1.6	1.6					3400	5200					5200		
1.5	**BN 100LA**	**2**	2880	5	73	0.84	3.53	5.1	1.9	2.0	40	18.3	**FD 15**	13	1000	1200	44	24	**FA 15**	13	1200	44	25
0.55		**6**	940	5.6	64	0.67	1.85	3.5	1.7	1.8					2900	4000					4000		
2.2	**BN 100LB**	**2**	2900	7.2	77	0.85	4.9	5.9	2.0	2.0	61	25	**FD 15**	26	700	900	65	31	**FA 15**	26	900	65	32
0.75		**6**	950	7.5	67	0.64	2.5	3.3	1.9	1.8					2100	3000					3000		
3	**BN 112M**	**2**	2900	9.9	78	0.87	6.4	6.3	2.0	2.1	98	30	**FD 06S**	40	—	1000	107	40	**FA 06S**	40	1000	107	32
1.1		**6**	950	11.1	72	0.64	3.4	3.9	1.8	1.8					—	2600					2600		
4.5	**BN 132S**	**2**	2910	14.8	78	0.84	9.9	5.8	1.9	1.8	213	44	**FD 56**	37	—	500	223	57	**FA 06**	37	500	223	58
1.5		**6**	960	14.9	74	0.67	4.4	4.2	1.9	2.0					—	2100					2100		
5.5	**BN 132M**	**2**	2920	18.0	78	0.87	11.7	6.2	2.1	1.9	270	53	**FD 56**	50	—	400	280	66	**FA 06**	50	400	280	67
2.2		**6**	960	22	77	0.71	5.8	4.3	2.1	2.0					—	1900					1900		

2/8P — 3000/750 min^{-1} - S3 60/40% — 50 Hz

													d.c. brake						a.c. brake				
													FD						FA				
P_n kW			n min^{-1}	M_n Nm	η %	cosφ	In 400V A	Is/In	Ms/Mn	Ma/Mn	J_m x 10^{-4} kgm^2	IM B5 Kg	Mod	Mb Nm	Z_o 1/h NB	Z_o 1/h SB	J_m x 10^{-4} kgm^2	IM B5 Kg	Mod	Mb Nm	Z_o 1/h	J_m x 10^{-4} kgm^2	IM B5 Kg
0.25	**BN 71A**	**2**	2790	0.86	61	0.87	0.68	3.9	1.8	1.9	10.9	6.7	**FD 03**	1.75	1300	1400	12	9.4	**FA 03**	2.5	1400	12	9.1
0.06		**8**	680	0.84	31	0.61	0.46	2.0	1.8	1.9					10000	13000					13000		
0.37	**BN 71B**	**2**	2800	1.26	63	0.86	0.99	3.9	1.8	1.9	12.9	7.7	**FD 03**	3.5	1200	1300	14	10.4	**FA 03**	3.5	1300	14	10.1
0.09		**8**	670	1.28	34	0.75	0.51	1.8	1.4	1.5					9500	13000					13000		
0.55	**BN 80A**	**2**	2830	1.86	66	0.86	1.40	4.4	2.1	2.0	20	9.9	**FD 04**	5.0	1500	1800	22	13.8	**FA 04**	5.0	1800	22	13.7
0.13		**8**	690	1.80	41	0.64	0.72	2.3	1.6	1.7					5600	8000					8000		
0.75	**BN 80B**	**2**	2800	2.6	68	0.88	1.81	4.6	2.1	2.0	25	11.3	**FD 04**	10	1700	1900	27	15.2	**FA 04**	10	1900	27	15.1
0.18		**8**	690	2.5	43	0.66	0.92	2.3	1.6	1.7					4800	7300					7300		
1.10	**BN 90L**	**2**	2830	3.7	63	0.84	3.00	4.5	2.1	1.9	28	14.0	**FD 05**	13	1400	1600	32	20	**FA 05**	13	1600	32	21
0.28		**8**	690	3.9	48	0.63	1.34	2.4	1.8	1.9					3400	5100					5100		
1.5	**BN 100LA**	**2**	2880	5.0	69	0.85	3.69	4.7	1.9	1.8	40	18.3	**FD 15**	13	1000	1200	44	25	**FA 15**	13	1200	44	25
0.37		**8**	690	5.1	46	0.63	1.84	2.1	1.6	1.6					3300	5000					5000		
2.4	**BN 100LB**	**2**	2900	7.9	75	0.82	5.6	5.4	2.1	2.0	61	25	**FD 15**	26	550	700	65	31	**FA 15**	26	700	65	32
0.55		**8**	700	7.5	54	0.58	2.5	2.6	1.8	1.8					2000	3500					3500		
3	**BN 112M**	**2**	2900	9.9	76	0.87	6.5	6.3	2.1	1.9	98	30	**FD 06S**	40	—	900	107	40	**FA 06S**	40	900	107	42
0.75		**8**	690	10.4	60	0.65	2.8	2.5	1.6	1.6					—	2900					2900		
4	**BN 132S**	**2**	2870	13.3	73	0.84	9.4	5.6	2.3	2.4	213	44	**FD 56**	37	—	500	223	57	**FA 06**	37	500	223	58
1		**8**	690	13.8	66	0.62	3.5	2.9	1.9	1.8					—	3500					3500		
5.5	**BN 132M**	**2**	2870	18.3	75	0.84	12.6	6.1	2.4	2.5	270	53	**FD 06**	50	—	400	280	66	**FA 06**	50	400	280	67
1.5		**8**	690	21	68	0.63	5.1	2.9	1.9	1.9					—	2400					2400		

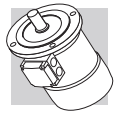

2/12P — 3000/500 min^{-1} - S3 60/40% — 50 Hz

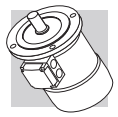

													d.c. brake						a.c. brake				
													FD						FA				
P_n kW			n min^{-1}	M_n Nm	η %	cosφ	In 400V A	Is/In	Ms/Mn	Ma/Mn	J_m x 10^{-4} kgm^2	IM B5 Kg	Mod	Mb Nm	Z_o 1/h NB	Z_o 1/h SB	J_m x 10^{-4} kgm^2	IM B5 Kg	Mod	Mb Nm	Z_o 1/h	J_m x 10^{-4} kgm^2	IM B5 Kg
0.55	**BN 80B**	**2**	2820	1.86	64	0.89	1.39	4.2	1.6	1.7	25	11.3	**FD 04**	5.0	1000	1300	27	15.2	**FA 04**	5.0	1300	27	15.1
0.09		**12**	430	2.0	30	0.63	0.69	1.8	1.9	1.8					8000	12000					12000		
0.75	**BN 90L**	**2**	2790	2.6	56	0.89	2.17	4.2	1.8	1.7	26	12.6	**FD 05**	13	1000	1150	30	18.6	**FA 05**	13	1150	30	19.3
0.12		**12**	430	2.7	26	0.63	1.06	1.7	1.4	1.6					4600	6300					6300		
1.10	**BN 100LA**	**2**	2850	3.7	65	0.85	2.87	4.5	1.6	1.8	40	18.3	**FD 15**	13	700	900	44	25	**FA 15**	13	900	44	25
0.18		**12**	430	4.0	26	0.54	1.85	1.5	1.3	1.5					4000	6000					6000		
1.5	**BN 100LB**	**2**	2900	4.9	67	0.86	3.76	5.6	1.9	1.9	54	22	**FD 15**	13	700	900	58	28	**FA 15**	13	900	58	29
0.25		**12**	440	5.4	36	0.46	2.18	1.8	1.7	1.8					3800	5000					5000		
2	**BN 112M**	**2**	2900	6.6	74	0.88	4.43	6.5	2.1	2.0	98	30	**FD 06S**	20	—	800	107	40	**FA 06S**	20	800	107	42
0.3		**12**	460	6.2	46	0.43	2.19	2.0	2.1	2.0					—	3400					3400		
3	**BN 132S**	**2**	2920	9.8	74	0.87	6.7	6.8	2.3	1.9	213	44	**FD 56**	37	—	450	223	57	**FA 06**	37	450	223	58
0.5		**12**	470	10.2	51	0.43	3.3	2.0	1.7	1.6					—	3000					3000		
4	**BN 132M**	**2**	2920	13.1	75	0.89	8.6	5.9	2.4	2.3	270	53	**FD 56**	37	—	400	280	66	**FA 06**	37	400	280	67
0.7		**12**	460	14.5	53	0.44	4.3	1.9	1.7	1.6					—	2800					2800		

4/6P — 1500/1000 min^{-1} - S1 — 50 Hz

P_n kW			n min^{-1}	M_n Nm	η %	cosφ	In 400V A	Is/In	Ms/Mn	Ma/Mn	J_m x 10^{-4} kgm^2	IM B5 Kg	d.c. brake FD Mod	Mb Nm	Z_o 1/h NB	Z_o 1/h SB	J_m x 10^{-4} kgm^2	IM B5 Kg	a.c. brake FA Mod	Mb Nm	Z_o 1/h	J_m x 10^{-4} kgm^2	IM B5 Kg
0.22	BN 71B	4	1410	1.5	64	0.74	0.67	3.9	1.8	1.9	9.1	7.3	FD 03	3.5	2500	3500	10.2	10.0	FA 03	3.5	3500	10.2	9.7
0.13		6	920	1.4	43	0.67	0.65	2.3	1.6	1.7					5000	9000					9000		
0.30	BN 80A	4	1410	2.0	61	0.82	0.87	3.5	1.3	1.5	15	8.2	FD 04	5.0	2500	3100	16.6	12.1	FA 04	5.0	3100	16.6	12.0
0.20		6	930	2.1	54	0.66	0.81	3.2	1.9	2.0					4000	6000					6000		
0.40	BN 80B	4	1430	2.7	63	0.75	1.22	3.9	1.8	1.8	20	9.9	FD 04	10	1800	2300	22	13.8	FA 04	10	2300	22	13.7
0.26		6	930	2.7	55	0.70	0.97	2.7	1.5	1.6					3600	5500					5500		
0.55	BN 90S	4	1420	3.7	70	0.78	1.45	4.5	2.0	1.9	21	12.2	FD 14	10	1500	2100	23	16.1	FA 14	10	2100	23	16.3
0.33		6	930	3.4	62	0.70	1.10	3.7	2.3	2.0					2500	4100					4100		
0.75	BN 90L	4	1420	5.0	74	0.78	1.88	4.3	1.9	1.8	28	14	FD 05	13	1400	2000	32	20	FA 05	13	2000	32	21
0.45		6	920	4.7	66	0.71	1.39	3.3	2.0	1.9					2300	3600					3600		
1.1	BN 100LA	4	1450	7.2	74	0.79	2.72	5.0	1.7	1.9	82	22	FD 15	26	1400	2000	86	28	FA 15	26	2000	86	29
0.8		6	950	8.0	65	0.69	2.57	4.1	1.9	2.1					2100	3300					3300		
1.5	BN 100LB	4	1450	9.9	75	0.79	3.65	5.1	1.7	1.9	95	25	FD 15	26	1300	1800	99	31	FA 15	26	1800	99	32
1.1		6	950	11.1	72	0.68	3.24	4.3	2.0	2.1					2000	3000					3000		
2.3	BN 112M	4	1450	15.2	75	0.78	5.7	5.2	1.8	1.9	168	32	FD 06S	40	—	1600	177	42	FA 06S	40	1600	177	44
1.5		6	960	14.9	73	0.72	4.1	4.9	2.0	2.0					—	2400					2400		
3.1	BN 132S	4	1460	20	83	0.83	6.5	5.9	2.1	2.0	213	44	FD 56	37	—	1200	223	57	FA 06	37	1200	223	58
2		6	960	20	77	0.75	4.9	4.5	2.1	2.1					—	1900					1900		
4.2	BN 132MA	4	1460	27	84	0.82	8.8	5.9	2.1	2.2	270	53	FD 06	50	—	900	280	66	FA 06	50	900	280	67
2.6		6	960	26	79	0.72	6.6	4.3	2.0	2.0					—	1500					1500		

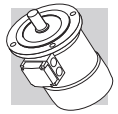

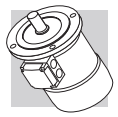

4/8P — 1500/750 min^{-1} - S1 — 50 Hz

													d.c. brake						a.c. brake				
													FD						FA				
P_n kW			n min^{-1}	M_n Nm	η %	cosφ	In 400V A	Is/In	Ms/Mn	Ma/Mn	J_m x 10^{-4} kgm^2	IM B5 Kg	Mod	Mb Nm	Z_o 1/h NB	Z_o 1/h SB	J_m x 10^{-4} kgm^2	IM B5 Kg	Mod	Mb Nm	Z_o 1/h	J_m x 10^{-4} kgm^2	IM B5 Kg
0.37	**BN 80A**	**4**	1400	2.5	63	0.82	1.03	3.3	1.4	1.4	15	8.2	**FD 04**	10	2300	3500	16.6	12.1	**FA 04**	10	3500	16.6	12.0
0.18		**8**	690	2.5	44	0.60	0.98	2.2	1.5	1.6					4500	7000					7000		
0.55	**BN 80B**	**4**	1390	3.8	65	0.86	1.42	3.8	1.7	1.6	20	9.9	**FD 04**	10	2200	2900	22	13.8	**FA 04**	10	2900	22	13.7
0.30		**8**	670	4.3	49	0.65	1.36	2.3	1.7	1.8					4200	6500					6500		
0.65	**BN 90S**	**4**	1390	4.5	73	0.85	1.51	4.0	1.9	1.9	28	13.6	**FD 14**	15	2300	2800	30	17.8	**FA 14**	15	2800	30	17.7
0.35		**8**	690	4.8	49	0.57	1.81	2.5	2.1	2.2					3500	6000					6000		
0.9	**BN 90L**	**4**	1370	6.3	73	0.87	2.05	3.8	1.8	1.8	30	15.1	**FD 05**	26	1700	2100	34	21	**FA 05**	26	2100	34	22
0.5		**8**	670	7.1	57	0.62	2.04	2.4	2.1	2.0					2500	4200					4200		
1.30	**BN 100LA**	**4**	1420	8.7	72	0.83	3.14	4.3	1.7	1.8	82	22	**FD 15**	40	1300	1700	86	28	**FA 15**	40	1700	86	29
0.70		**8**	700	9.6	58	0.64	2.72	2.8	1.8	1.8					2000	3400					3400		
1.8	**BN 100LB**	**4**	1420	12.1	69	0.87	4.3	4.2	1.6	1.7	95	25	**FD 15**	40	1200	1700	99	31	**FA 15**	40	1700	99	32
0.9		**8**	700	12.3	62	0.63	3.3	3.2	1.7	1.8					1600	2600					2600		
2.2	**BN 112M**	**4**	1440	14.6	77	0.85	4.9	5.3	1.8	1.8	168	32	**FD 06S**	60	—	1200	177	42	**FA 06S**	60	1200	177	43
1.2		**8**	710	16.1	70	0.63	3.9	3.3	1.9	1.8					—	2000					2000		
3.6	**BN 132S**	**4**	1440	24	80	0.82	7.9	6.5	2.1	1.9	295	45	**FD 56**	75	—	1000	305	58	**FA 06**	75	1000	305	59
1.8		**8**	720	24	72	0.55	6.6	4.6	1.9	2.0					—	1400					1400		
4.6	**BN 132M**	**4**	1450	30	81	0.83	9.9	6.5	2.2	1.9	383	56	**FD 06**	100	—	1000	393	69	**FA 07**	100	1000	406	74
2.3		**8**	720	31	73	0.54	8.4	4.4	2.3	2.0					—	1300					1300		

2P — 3000 min^{-1} - S1 — 50 Hz

P_n kW			n min^{-1}	M_n Nm	IE1	η (100%) %	η (75%) %	η (50%) %	cosφ	In 400V A	Is/In	Ms/Mn	Ma/Mn	J_m x 10^{-4} kgm^2	IM B5 Kg	d.c. brake FD Mod	Mb Nm	Z_o 1/h NB	Z_o 1/h SB	J_m x 10^{-4} kgm^2	IM B5 Kg	a.c. brake FA Mod	Mb Nm	Z_o 1/h	J_m x 10^{-4} kgm^2	IM B5 Kg
0.18	**M 05A**	**2**	2730	0.63	○	59.9	56.9	51.9	0.77	0.56	3.0	2.1	2.0	2.0	3.2	**FD 02**	1.75	3900	4800	2.6	4.9	**FA 02**	1.75	4800	2.6	4.7
0.25	**M 05B**	**2**	2740	0.87	○	66.0	64.8	64.8	0.76	0.72	3.3	2.3	2.3	2.3	3.6	**FD 02**	1.75	3900	4800	3.0	5.3	**FA 02**	1.75	4800	3.0	5.1
0.37	**M 05C**	**2**	2800	1.26	○	69.1	66.8	66.8	0.78	0.99	3.9	2.6	2.6	3.3	4.8	**FD 02**	3.5	3600	4500	3.9	6.5	**FA 02**	3.5	4500	3.9	6.3
0.55	**M 1SD**	**2**	2820	1.86	○	76.0	75.8	74.8	0.76	1.37	5.0	2.9	2.8	4.1	5.8	**FD 03**	5	2900	4200	5.3	8.5	**FA 03**	5	4200	5.3	8.2
0.75	**M 1LA**	**2**	2810	2.6	○	76.6	76.2	76.2	0.76	1.86	5.1	3.1	2.8	5.0	6.9	**FD 03**	5	1900	3300	6.1	9.6	**FA 03**	5	3300	6.1	9.3
1.1	**M 2SA**	**2**	2800	3.8	•	76.4	76.2	75.0	0.81	2.57	4.8	2.8	2.4	9.0	8.8	**FD 04**	10	1500	3000	10.6	11.9	**FA 04**	10	3000	10.6	12.6
1.5	**M 2SB**	**2**	2800	5.1	•	79.1	79.5	77.2	0.81	3.4	4.9	2.7	2.4	11.4	10.6	**FD 04**	15	1300	2600	13.0	9.9	**FA 04**	15	2600	13.0	14.4
2.2	**M 3SA**	**2**	2880	7.3	•	82.7	82.1	81.0	0.80	4.8	6.3	2.9	2.7	24	15.5	**FD 15**	26	1100	2400	28	22	**FA 15**	26	2400	28	23
3	**M 3LA**	**2**	2860	10.0	•	81.5	81.3	77.4	0.79	6.7	5.6	2.6	2.2	31	18.7	**FD 15**	26	700	1600	35	25	**FA 15**	26	1600	35	26
4	**M 3LB**	**2**	2870	13.3	•	83.1	83.0	77.8	0.80	8.7	5.8	2.7	2.5	39	22	**FD 15**	40	450	900	43	28	**FA 15**	40	900	43	29
5.5	**M 4SA**	**2**	2890	18.2	•	84.7	84.5	81.2	0.84	11.2	5.9	2.6	2.2	101	33	**FD 06**	50	—	600	112	46	**FA 06**	50	600	112	47
7.5	**M 4SB**	**2**	2900	25	•	86.5	86.3	84.4	0.85	14.7	6.4	2.6	2.2	145	40	**FD 06**	50	—	550	154	53	**FA 06**	50	550	154	54
9.2	**M 4LA**	**2**	2930	30	•	87.0	86.5	83.6	0.86	17.7	6.7	2.8	2.3	178	51	**FD 56**	75	—	430	189	64	**FA 06**	75	430	189	65
11	**M 4LC**	**2**	2920	36	•	87.6	87.0	86.0	0.88	20.6	6.9	2.9	2.5	210	60											
15	**M 5SB**	**2**	2930	49	•	89.6	89.4	88.0	0.86	28.1	7.1	2.6	2.3	340	70											
18.5	**M 5SC**	**2**	2930	60	•	90.4	90.1	89.0	0.86	34	7.6	2.7	2.3	420	83											
22	**M 5LA**	**2**	2930	72	•	89.9	89.7	89.5	0.88	40	7.8	2.6	2.4	490	95											

○ = n.a. • = IE1

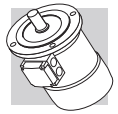

4P — 1500 min^{-1} - S1 — 50 Hz

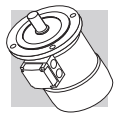

															d.c. brake						a.c. brake				
															FD						FA				
P_n kW		n min^{-1}	M_n Nm	IE1	η (100%) %	η (75%) %	η (50%) %	cosφ	In 400V A	Is/In	Ms/Mn	Ma/Mn	J_m x 10^{-4} kgm^2	IM B5 Kg	Mod	Mb Nm	Z_o 1/h NB	Z_o 1/h SB	J_m x 10^{-4} kgm^2	IM B5 Kg	Mod	Mb Nm	Z_o 1/h	J_m x 10^{-4} kgm^2	IM B5 Kg
0.09	**M 0B 4**	1350	0.64	○	51.7	47.6	42.9	0.60	0.42	2.6	2.5	2.4	1.5	2.9											
0.12	**M 05A 4**	1350	0.85	○	59.8	56.2	47.0	0.62	0.47	2.6	1.9	1.8	2.0	3.2	**FD 02**	1.75	10000	13000	2.6	4.9	**FA 02**	1.75	13000	2.6	4.7
0.18	**M 05B 4**	1320	1.30	○	54.8	52.9	52.5	0.67	0.71	2.6	2.2	2.0	2.3	3.6	**FD 02**	3.5	10000	13000	3.0	5.3	**FA 02**	3.5	13000	3.0	5.1
0.25	**M 05C 4**	1340	1.78	○	65.3	65.0	57.9	0.69	0.80	2.7	2.1	1.9	3.3	4.8	**FD 02**	3.5	7800	10000	3.9	6.5	**FA 02**	3.5	10000	3.9	6.3
0.37	**M 1SD 4**	1370	2.6	○	66.8	66.7	63.0	0.76	1.05	3.7	2.0	1.9	6.9	5.5	**FD 03**	5	6000	9400	8.0	8.2	**FA 03**	5	9400	8.0	7.9
0.55	**M 1LA 4**	1380	3.8	○	69.0	68.9	68.8	0.74	1.55	4.1	2.3	2.3	9.1	6.9	**FD 53**	7.5	4300	8700	10.2	9.6	**FA 03**	7.5	8700	10.2	9.3
0.75	**M 2SA 4**	1400	5.1	•	75.0	74.5	69.3	0.78	1.85	4.9	2.7	2.5	20	9.2	**FD 04**	15	4100	7800	22	13.1	**FA 04**	15	7800	22	13.0
1.1	**M 2SB 4**	1400	7.5	•	76.4	76.2	70.4	0.78	2.66	5.1	2.8	2.5	25	10.6	**FD 04**	15	2600	5300	27	14.5	**FA 04**	15	5300	27	14.4
1.5	**M 3SA 4**	1410	10.2	•	79.6	80.5	79.3	0.77	3.5	4.6	2.1	2.1	34	15.5	**FD 15**	26	2800	4900	38	22	**FA 15**	26	4900	38	23
2.2	**M 3LA 4**	1410	14.9	•	81.1	81.4	79.9	0.75	5.2	4.5	2.2	2.0	40	17	**FD 15**	40	2600	4700	44	24	**FA 15**	40	4700	44	24
3	**M 3LB 4**	1410	20	•	82.6	83.8	83.7	0.77	6.8	5.0	2.3	2.2	54	21	**FD 15**	40	2400	4400	58	27	**FA 15**	40	4400	58	28
4	**M 3LC 4**	1400	27	○	82.7	83.1	80.5	0.78	9.0	4.7	2.3	2.2	61	23	**FD 55**	55	—	1300	65	29	**FA 15**	40	1300	65	30
5.5	**M 4SA 4**	1440	36	•	84.7	84.8	82.5	0.81	11.6	5.5	2.3	2.2	213	42	**FD 56**	75	—	1050	223	55	**FA 06**	75	1050	223	56
7.5	**M 4LA 4**	1440	50	•	86.0	86.3	85.3	0.81	15.5	5.7	2.5	2.4	270	51	**FD 06**	100	—	950	280	64	**FA 07**	100	950	280	65
9.2	**M 4LB 4**	1440	61	•	88.4	88.6	87.5	0.81	18.8	5.9	2.7	2.5	319	57	**FD 07**	150	—	900	342	73	**FA 07**	150	900	342	75
11	**M 4LC 4**	1440	73	•	87.6	87.8	86.0	0.81	22.4	6.0	2.7	2.5	360	65	**FD 07**	150	—	850	382	81	**FA 07**	150	850	382	83
15	**M 5SB 4**	1460	98	•	88.7	88.5	88.4	0.81	30.1	6.0	2.3	2.1	650	85	**FD 08**	200	—	750	725	115	**FA 08**	200	750	710	114
18.5	**M 5LA 4**	1460	121	•	89.3	89.5	89.2	0.81	37	6.2	2.6	2.5	790	101	**FD 08**	250	—	700	865	131	**FA 08**	250	700	850	130

○ = n.a. • = IE1

6P — 1000 min^{-1} - S1 — 50 Hz

P_n kW			n min^{-1}	M_n Nm	IE1	η (100%) %	η (75%) %	η (50%) %	cosφ	In 400V A	Is/In	Ms/Mn	Ma/Mn	J_m x 10^{-4} kgm^2	IM B5 Kg	d.c. brake FD Mod	Mb Nm	Z_o 1/h NB	Z_o 1/h SB	J_m x 10^{-4} kgm^2	IM B5 Kg	a.c. brake FA Mod	Mb Nm	Z_o 1/h	J_m x 10^{-4} kgm^2	IM B5 Kg
0.09	**M 05A**	**6**	880	0.98	○	41.0	41.0	32.9	0.53	0.60	2.1	2.1	1.8	3.4	4.3	**FD 02**	3.5	9000	14000	4.0	6.0	**FA 02**	3.5	14000	4.0	5.8
0.12	**M 05B**	**6**	870	1.32	○	45.0	44.0	41.8	0.60	0.64	2.1	1.9	1.7	3.7	4.6	**FD 02**	3.5	9000	14000	4.3	6.3	**FA 02**	3.5	14000	4.3	6.1
0.18	**M 1SC**	**6**	900	1.91	○	55.0	55.5	51.0	0.69	0.68	2.6	1.9	1.7	8.4	5.1	**FD 03**	5	8100	13500	9.5	7.8	**FA 03**	5	13500	9.5	7.5
0.25	**M 1SD**	**6**	900	2.7	○	62.0	58.5	51.4	0.71	0.82	2.6	1.9	1.7	10.9	6.3	**FD 03**	5	7800	13000	12	9.0	**FA 03**	5	13000	12	8.7
0.37	**M 1LA**	**6**	910	3.9	○	66.0	60.0	53.3	0.69	1.17	3.0	2.4	2.0	12.9	7.3	**FD 53**	7.5	5100	9500	14	10.0	**FA 03**	7.5	9500	14	9.7
0.55	**M 2SA**	**6**	920	5.7	○	70.0	69.8	64.3	0.68	1.67	3.9	2.6	2.2	25	10.6	**FD 04**	15	4800	7200	27	14.5	**FA 04**	15	7200	27	14.4
0.75	**M 2SB**	**6**	920	7.8	•	70.0	70.0	64.4	0.65	2.38	3.8	2.5	2.2	28	11.5	**FD 04**	15	3400	6400	30	15.4	**FA 04**	15	6400	30	15.3
1.1	**M 3SA**	**6**	920	11.4	•	75.0	74.0	72.0	0.72	2.9	4.3	2.0	1.8	33	17	**FD 15**	26	2700	5000	37	23	**FA 15**	26	5000	37	24
1.5	**M 3LA**	**6**	940	15.2	•	75.2	74.2	70.3	0.72	4.0	4.1	2.1	2.0	82	21	**FD 15**	40	1900	4100	86	27	**FA 15**	40	4100	86	28
1.85	**M 3LB**	**6**	930	19.0	•	76.6	72.8	62.6	0.73	4.8	4.6	2.1	2.0	95	23	**FD 15**	40	1700	3600	99	29	**FA 15**	40	3600	99	30
2.2	**M 3LC**	**6**	930	23	•	77.7	76.8	72.4	0.71	5.8	4.7	2.3	2.1	95	23	**FD 55**	55	—	1900	99	29	**FA 15**	40	1900	99	30
3	**M 4SA**	**6**	940	30	•	79.7	77.0	75.1	0.76	7.1	5.1	1.9	1.8	216	34	**FD 56**	75	—	1400	226	47	**FA 06**	75	1400	226	48
4	**M 4LA**	**6**	950	40	•	81.4	81.5	79.5	0.77	9.2	5.5	2.0	1.8	295	43	**FD 06**	100	—	1200	305	56	**FA 07**	100	1200	305	57
5.5	**M 4LB**	**6**	945	56	•	83.1	80.9	79.1	0.78	12.2	6.1	2.1	1.9	383	54	**FD 07**	150	—	1050	406	70	**FA 07**	150	1050	406	72
7.5	**M 5SA**	**6**	955	75	•	85.0	85.0	84.8	0.81	15.7	5.9	2.2	2.0	740	69	**FD 08**	170	—	900	815	98	**FA 08**	170	900	800	98
11	**M 5SB**	**6**	960	109	•	86.4	86.5	85.9	0.81	22.7	6.6	2.5	2.3	970	89	**FD 08**	200	—	800	1045	119	**FA 08**	200	800	1030	118

○ = n.a. • = IE1

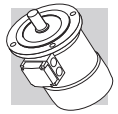

2/4P — 3000/1500 min-1 - S1 — 50 Hz

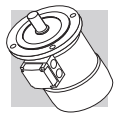

													d.c. brake						a.c. brake				
													FD						FA				
P_n kW			n min-1	M_n Nm	η %	cosφ	In 400V A	Is/In	Ms/Mn	Ma/Mn	J_m x 10^{-4} kgm²	IM B5 Kg	Mod	Mb Nm	Z_o 1/h NB	Z_o 1/h SB	J_m x 10^{-4} kgm²	IM B5 Kg	Mod	Mb Nm	Z_o 1/h	J_m x 10^{-4} kgm²	IM B5 Kg
0.20	**M 05A**	**2**	2700	0.71	55	0.82	0.64	3.5	2.1	1.9	2.9	4.1	**FD 02**	3.5	2200	2600	3.5	5.8	**FA 02**	3.5	2600	3.5	5.6
0.15		**4**	1350	1.06	49	0.67	0.66	2.6	1.8	1.7					4000	5100					5100		
0.28	**M 1SB**	**2**	2700	0.99	56	0.82	0.88	2.9	1.9	1.7	4.7	4.0	**FD 03**	3.5	2100	2400	5.8	6.7	**FA 03**	3.5	2400	5.8	6.4
0.20		**4**	1370	1.39	59	0.68	1.02	3.1	1.8	1.7					3800	4800					4800		
0.37	**M 1SC**	**2**	2740	1.29	56	0.82	1.16	3.5	1.8	1.8	5.8	4.7	**FD 03**	5	1400	2100	6.9	7.4	**FA 03**	5	2100	6.9	7.1
0.25		**4**	1390	1.72	60	0.73	0.82	3.3	2.0	1.9					2900	4200					4200		
0.45	**M 1SD**	**2**	2780	1.55	63	0.85	1.21	3.8	1.8	1.8	6.9	5.5	**FD 03**	5	1400	2100	8.0	8.2	**FA 03**	5	2100	8.0	7.9
0.30		**4**	1400	2.0	63	0.74	0.93	3.8	2.1	1.9					2900	4200					4200		
0.55	**M 1LA**	**2**	2800	1.9	73	0.79	1.38	4.2	2.0	1.8	9.1	6.9	**FD 03**	5	1600	2200	10.2	9.6	**FA 03**	5	2200	10.2	9.3
0.37		**4**	1400	2.5	68	0.72	1.09	3.9	2.2	2.0					3300	4600					4600		
0.75	**M 2SA**	**2**	2780	2.6	65	0.85	1.96	3.8	1.9	1.8	20	9.2	**FD 04**	10	1400	1600	22	13.1	**FA 04**	10	1600	22	13.0
0.55		**4**	1400	3.8	68	0.81	1.44	3.9	1.7	1.7					2700	3600					3600		
1.1	**M 2SB**	**2**	2730	3.9	65	0.86	2.84	3.9	2.0	1.9	25	10.7	**FD 04**	10	1200	1500	27	14.5	**FA 04**	10	1500	27	14.5
0.75		**4**	1410	5.1	75	0.81	1.78	4.5	2.1	2.0					2300	3100					3100		
1.5	**M 3SA**	**2**	2830	5.1	74	0.83	3.5	4.7	2.1	2.0	34	15.5	**FD 15**	26	700	1000	38	22	**FA 15**	26	1000	38	23
1.1		**4**	1420	7.4	77	0.78	2.6	4.3	2.1	2.0					1600	2600					2600		
2.2	**M 3LA**	**2**	2800	7.5	72	0.85	5.2	4.5	2.0	1.9	40	17	**FD 15**	26	600	900	44	24	**FA 15**	26	900	44	24
1.5		**4**	1410	10.2	73	0.79	3.8	4.7	2.0	2.0					1300	2300					2300		
3.5	**M 3LB**	**2**	2850	11.7	80	0.84	7.5	5.4	2.2	2.1	61	23	**FD 15**	40	500	900	65	29	**FA 15**	40	900	65	30
2.5		**4**	1420	16.8	82	0.80	5.5	5.2	2.2	2.2					1000	2100					2100		
4.8	**M 4 SA**	**2**	2900	15.8	81	0.88	9.7	6.0	2.0	1.9	213	42	**FD 06**	50	—	400	233	55	**FA 06**	50	400	233	56
3.8		**4**	1430	25.4	81	0.84	8.1	5.2	2.1	2.1					—	950					950		
5.5	**M 4SB**	**2**	2890	18.2	80	0.87	11.4	5.9	2.4	2.0	213	42	**FD 56**	75	—	350	223	55	**FA 06**	75	350	223	56
4.4		**4**	1440	29	82	0.84	9.2	5.3	2.2	2.0					—	900					900		
7.5	**M 4LA**	**2**	2900	25	82	0.87	15.2	6.5	2.4	2.0	270	51	**FD 06**	100	—	350	280	64	**FA 07**	100	350	280	65
6		**4**	1430	40	84	0.85	12.1	5.8	2.3	2.1					—	950					950		
9.2	**M 4LB**	**2**	2920	30	83	0.86	18.6	6.0	2.6	2.2	319	57	**FD 07**	150	—	300	342	73	**FA 07**	150	300	342	75
7.3		**4**	1440	48	85	0.85	14.6	5.5	2.3	2.1					—	800					800		

2/6P — 3000/1000 min^{-1} - S3 60/40% — 50 Hz

													d.c. brake						a.c. brake				
													FD						FA				
P_n kW			n min^{-1}	M_n Nm	η %	cosφ	In 400V A	Is/In	Ms/Mn	Ma/Mn	J_m x 10^{-4} kgm^2	IM B5 Kg	Mod	Mb Nm	Z_o 1/h NB	Z_o 1/h SB	J_m x 10^{-4} kgm^2	IM B5 Kg	Mod	Mb Nm	Z_o 1/h	J_m x 10^{-4} kgm^2	IM B5 Kg
0.25	**M 1SA**	**2**	2850	0.84	60	0.82	0.73	4.3	1.9	1.8	6.9	5.5	**FD 03**	1.75	1500	1700	8.0	8.2	**FA 03**	1.75	1700	8.0	7.9
0.08		**6**	910	0.84	43	0.70	0.38	2.1	1.4	1.5					10000	13000					13000		
0.37	**M 1LA**	**2**	2880	1.23	62	0.80	1.08	4.4	1.9	1.8	9.1	6.9	**FD 03**	3.5	1000	1300	10.2	9.6	**FA 03**	3.5	1300	10.2	9.3
0.12		**6**	900	1.27	44	0.73	0.54	2.4	1.4	1.5					9000	11000					11000		
0.55	**M 2SA**	**2**	2800	1.88	63	0.86	1.47	4.5	1.9	1.7	20	9.2	**FD 04**	5	1500	1800	22	13.1	**FA 04**	5	1800	22	13.0
0.18		**6**	930	1.85	52	0.65	0.77	3.3	2.0	1.9					4100	6300					6300		
0.75	**M 2SB**	**2**	2800	2.6	66	0.87	1.89	4.3	1.8	1.6	25	10.6	**FD 04**	5	1700	1900	27	14.5	**FA 04**	5	1900	27	14.4
0.25		**6**	930	2.6	54	0.67	1.00	3.2	1.7	1.8					3800	6000					6000		
1.1	**M 3SA**	**2**	2870	3.7	71	0.82	2.73	4.9	1.8	1.9	34	15.5	**FD 15**	13	1000	1300	38	22	**FA 15**	13	1300	38	23
0.37		**6**	930	3.8	63	0.70	1.21	3.1	1.5	1.8					3500	5000					5000		
1.5	**M 3LA**	**2**	2880	5.0	73	0.84	3.53	5.1	1.9	2.0	40	17	**FD 15**	13	1000	1200	44	24	**FA 15**	13	1200	44	24
0.55		**6**	940	5.6	64	0.67	1.85	3.5	1.7	1.8					2900	4000					4000		
2.2	**M 3LB**	**2**	2900	7.2	77	0.85	4.9	5.9	2.0	2.0	61	23	**FD 15**	26	700	900	65	29	**FA 15**	26	900	65	30
0.75		**6**	950	7.5	67	0.64	2.5	3.3	1.9	1.8					2100	3000					3000		
3	**M 4SA**	**2**	2910	9.9	74	0.88	6.6	5.6	2.0	2.1	170	36	**FD 56**	37	—	600	182	48	**FA 06**	37	600	182	50
1.1		**6**	960	10.9	73	0.68	3.2	4.5	2.2	2.0					—	2200					2200		
4.5	**M 4SB**	**2**	2910	14.8	78	0.84	9.9	5.8	1.9	1.8	213	42	**FD 56**	37	—	500	223	55	**FA 06**	37	500	223	56
1.5		**6**	960	14.9	74	0.67	4.4	4.2	1.9	2.0					—	2100					2100		
5.5	**M 4LA**	**2**	2920	18.0	78	0.87	11.7	6.2	2.1	1.9	270	51	**FD 06**	50	—	400	280	64	**FA 06**	50	400	280	65
2.2		**6**	960	22	77	0.71	5.8	4.3	2.1	2.0					—	1900					1900		

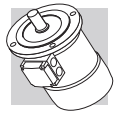

2/8P — 3000/750 min^{-1} - S3 60/40% — 50 Hz

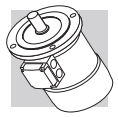

													d.c. brake						a.c. brake				
													FD						FA				
P_n kW			n min^{-1}	M_n Nm	η %	cosφ	In 400V A	Is/In	Ms/Mn	Ma/Mn	J_m x 10^{-4} kgm^2	IM B5 Kg	Mod	Mb Nm	Z_o 1/h NB	Z_o 1/h SB	J_m x 10^{-4} kgm^2	IM B5 Kg	Mod	Mb Nm	Z_o 1/h	J_m x 10^{-4} kgm^2	IM B5 Kg
0.37	**M 1LA**	**2**	2800	1.26	63	0.86	0.99	3.9	1.8	1.9	12.9	7.3	**FD 03**	3.5	1200	1300	14	10.0	**FA 03**	3.5	1300	14	9.7
0.09		**8**	670	1.28	34	0.75	0.51	1.8	1.4	1.5					9500	13000					13000		
0.55	**M 2SA**	**2**	2830	1.86	66	0.86	1.40	4.4	2.1	2.0	20	9.2	**FD 04**	5	1500	1800	22	13.1	**FA 04**	5	1800	22	13.0
0.13		**8**	690	1.80	41	0.64	0.72	2.3	1.6	1.7					5600	8000					8000		
0.75	**M 2SB**	**2**	2800	2.6	68	0.88	1.81	4.6	2.1	2.0	25	10.6	**FD 04**	10	1700	1900	27	14.5	**FA 04**	10	1900	27	14.4
0.18		**8**	690	2.5	43	0.66	0.92	2.3	1.6	1.7					4800	7300					7300		
1.1	**M 3SA**	**2**	2870	3.7	69	0.84	2.74	4.6	1.8	1.7	34	15.5	**FD 15**	13	1000	1300	38	22	**FA 15**	13	1300	38	23
0.28		**8**	690	3.9	44	0.56	1.64	2.3	1.4	1.7					3400	5000					5000		
1.5	**M 3LA**	**2**	2880	5.0	69	0.85	3.69	4.7	1.9	1.8	40	17	**FD 15**	13	1000	1200	44	24	**FA 15**	13	1200	44	24
0.37		**8**	690	5.1	46	0.63	1.84	2.1	1.6	1.6					3300	5000					5000		
2.4	**M 3LB**	**2**	2900	7.9	75	0.82	5.6	5.4	2.1	2.0	61	23	**FD 15**	26	550	700	65	29	**FA 15**	26	700	65	30
0.55		**8**	700	7.5	54	0.58	2.5	2.6	1.8	1.8					2000	3500					3500		
3	**M 4SA**	**2**	2920	9.8	72	0.85	7.1	5.6	2.0	1.8	162	36	**FD 56**	37	—	600	182	48	**FA 06**	37	600	182	50
0.75		**8**	710	10.1	61	0.64	2.8	3.0	1.7	1.8					—	3400					3400		
4	**M 4SB**	**2**	2870	13.3	73	0.84	9.4	5.6	2.3	2.4	213	42	**FD 56**	37	—	500	223	55	**FA 06**	37	500	223	56
1		**8**	690	13.8	66	0.62	3.5	2.9	1.9	1.8					—	3500					3500		
5.5	**M 4LA**	**2**	2870	18.3	75	0.84	12.6	6.1	2.4	2.5	270	51	**FD 06**	50	—	400	280	64	**FA 06**	50	400	280	65
1.5		**8**	690	21	68	0.63	5.1	2.9	1.9	1.9					—	2400					2400		

2/12P — 3000/500 min^{-1} - S3 60/40% — 50 Hz

													d.c. brake						a.c. brake				
													FD						FA				
P_n kW			n min^{-1}	M_n Nm	η %	cosφ	In 400V A	Is/In	Ms/Mn	Ma/Mn	J_m x 10^{-4} kgm^2	IM B5 Kg	Mod	Mb Nm	Z_o 1/h NB	Z_o 1/h SB	J_m x 10^{-4} kgm^2	IM B5 Kg	Mod	Mb Nm	Z_o 1/h	J_m x 10^{-4} kgm^2	IM B5 Kg
0.55	**M 2SA**	**2**	2820	1.86	64	0.89	1.39	4.2	1.6	1.7	25	10.6	**FD 04**	5	1000	1300	27	14.5	**FA 04**	5	1300	27	14.4
0.09		**12**	430	2.0	30	0.63	0.69	1.8	1.9	1.8					8000	12000					12000		
0.75	**M 3SA**	**2**	2900	2.5	65	0.81	2.06	5.2	1.9	2.1	34	15.5	**FD 15**	13	700	900	38	22	**FA 15**	13	900	38	23
0.12		**12**	460	2.5	33	0.43	1.22	1.9	1.3	1.6					5000	7000					7000		
1.1	**M 3LA**	**2**	2850	3.7	65	0.85	2.87	4.5	1.6	1.8	40	17	**FD 15**	13	700	900	44	24	**FA 15**	13	900	44	24
0.18		**12**	430	4.0	26	0.54	1.85	1.5	1.3	1.5					4000	6000					6000		
1.5	**M 3LB**	**2**	2900	4.9	67	0.86	3.76	5.6	1.9	1.9	54	21	**FD 15**	13	700	900	58	27	**FA 15**	13	900	58	28
0.25		**12**	440	5.4	36	0.46	2.18	1.8	1.7	1.8					3800	5000					5000		
2	**M 3LC**	**2**	2850	6.7	70	0.84	4.9	4.9	1.8	1.7	61	23	**FD 55**	18	—	700	65	29	**FA 15**	18	700	65	30
0.3		**12**	450	6.4	38	0.47	2.4	1.7	1.6	1.7					—	3500					3500		
3	**M 4SA**	**2**	2920	9.8	74	0.87	6.7	6.8	2.3	1.9	213	42	**FD 56**	37	—	450	223	55	**FA 06**	37	450	223	56
0.5		**12**	470	10.2	51	0.43	3.3	2.0	1.7	1.6					—	3000					3000		
4	**M 4LA**	**2**	2920	13.1	75	0.89	8.6	5.9	2.4	2.3	270	51	**FD 56**	37	—	400	280	64	**FA 06**	37	400	280	65
0.7		**12**	460	14.5	53	0.44	4.3	1.9	1.7	1.6					—	2800					2800		

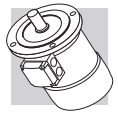

BN - IM B5

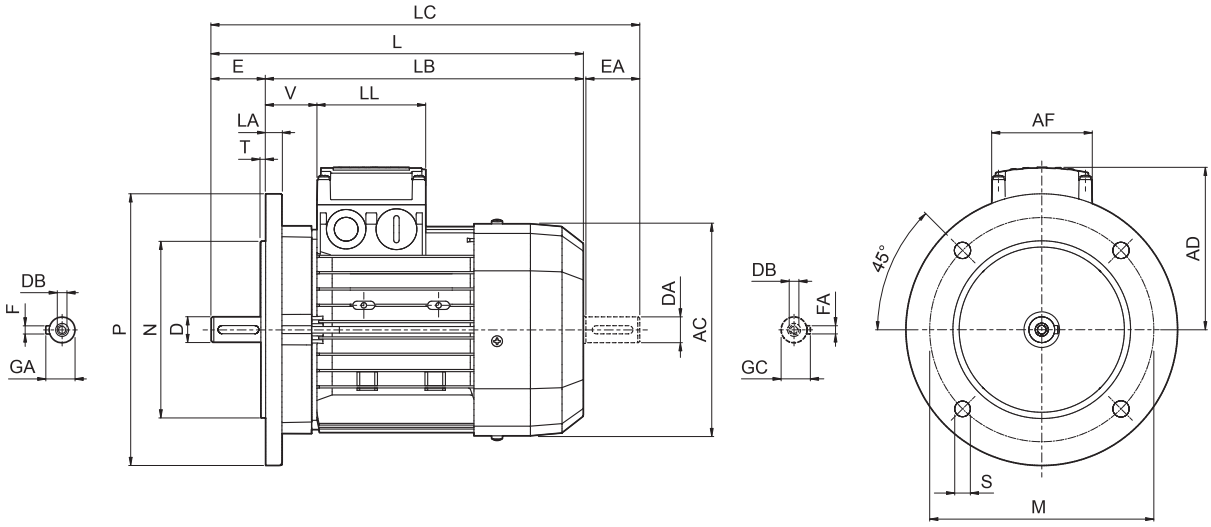

	Shaft					Flange						Motor							
	D DA	E EA	DB	GA GC	F FA	M	N	P	S	T	LA	AC	L	LB	LC	AD	AF	LL	V
BN 56	9	20	M3	10.2	3	100	80	120	7	3	8	110	185	165	207	91	74	80	34
BN 63	11	23	M4	12.5	4	115	95	140	9.5		10	121	207	184	232	95			26
BN 71	14	30	M5	16	5	130	110	160		3.5		138	249	219	281	108			37
BN 80	19	40	M6	21.5	6	165	130	200	11.5		11.5	156	274	234	315	119			38
BN 90	24	50	M8	27	8							176	326	276	378	133	98	98	44
BN 100	28	60	M10	31		215	180	250	14	4	14	195	367	307	429	142			50
BN 112											15	219	385	325	448	157			52
BN 132	38	80	M12	41	10	265	230	300			20	258	493	413	576	193	118	118	58
BN 160 MR	42 38 (1)	110 80 (1)	M16 M12 (1)	45 41 (1)	12 10 (1)	300	250	350	18.5	5	15		562	452	645				218
BN 160 M												310	596	486	680	245	187	187	51
BN 160 L																			
BN 180 M	48 38 (1)	110 110 (1)	M16 M12 (1)	51.5 41 (1)	14 10 (1)							310	640	530	724				
BN 180 L	48 42 (1)		M16 M16 (1)	51.5 45 (1)	14 12 (1)						18	348	708	598	823	261			52
BN 200 L	55 42 (1)		M20 M16 (1)	59 45 (1)	16 12 (1)	350	300	400					722	612	837				66

NOTE:
1) These values refer to the rear shaft end.

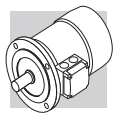

BN_FD ; IM B5

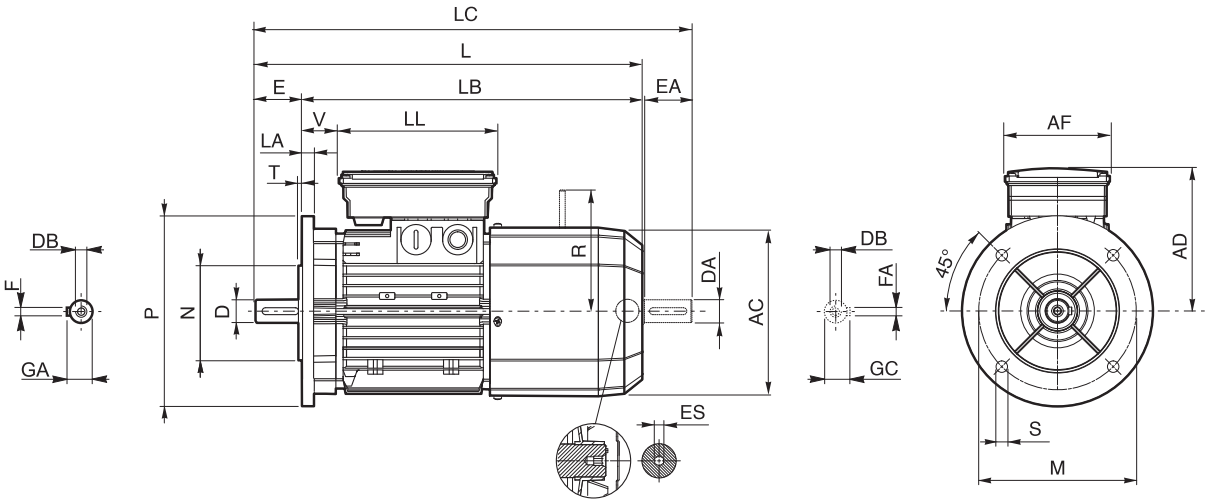

	Shaft					Flange						Motor									
	D DA	E EA	DB	GA GC	F FA	M	N	P	S	T	LA	AC	L	LB	LC	AD	AF	LL	V	R	ES
BN 63	11	23	M4	12.5	4	115	95	140	9.5	3	10	121	272	249	297	122	98	133	14	96	5
BN 71	14	30	M5	16	5	130	110	160	9.5	3.5		138	310	280	342	135			25	103	
BN 80	19	40	M6	21.5	6	165	130	200	11.5		11.5	156	346	306	388	146			41	129	
BN 90 S	24	50	M8	27	8							176	409	359	461	149	110	165	39	160	6
BN 90 L																146					
BN 100	28	60	M10	31		215	180	250	14	4	14	195	458	398	521	158		165	62		
BN 112											15	219	484	424	547	173		165	73	199	
BN 132	38	80	M12	41	10	265	230	300			20	258	603	523	686	210	140	188	46	204 (2)	
BN 160 MR	42 38 (1)	110 80 (1)	M16 M12 (1)	45 41 (1)	12 10 (1)	300	250	350	18.5	5	15		672	562	755				161	226	
BN 160 M												310	736	626	820	245	187	187	51	266	—
BN 160 L	42 38 (1)	110 80 (1)	M16 M12 (1)	45 41 (1)	12 10 (1)																
BN 180 M	48 38 (1)			51.5 41 (1)	14 10 (1)								780	670	864						
BN 180 L	48 42 (1)	110 110 (1)	M16 M16 (1)	51.5 45 (1)	14 12 (1)						18	348	866	756	981	261			52	305	
BN 200 L	55 42 (1)		M20 M16 (1)	59 45 (1)	16 12 (1)	350	300	400	18.5				878	768	993				64		

NOTE:
1) These values refer to the rear shaft end.
2) For FD07 brake value R=226.

ES hexagon is not supplied with PS option.

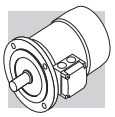

BN_FA - IM B5

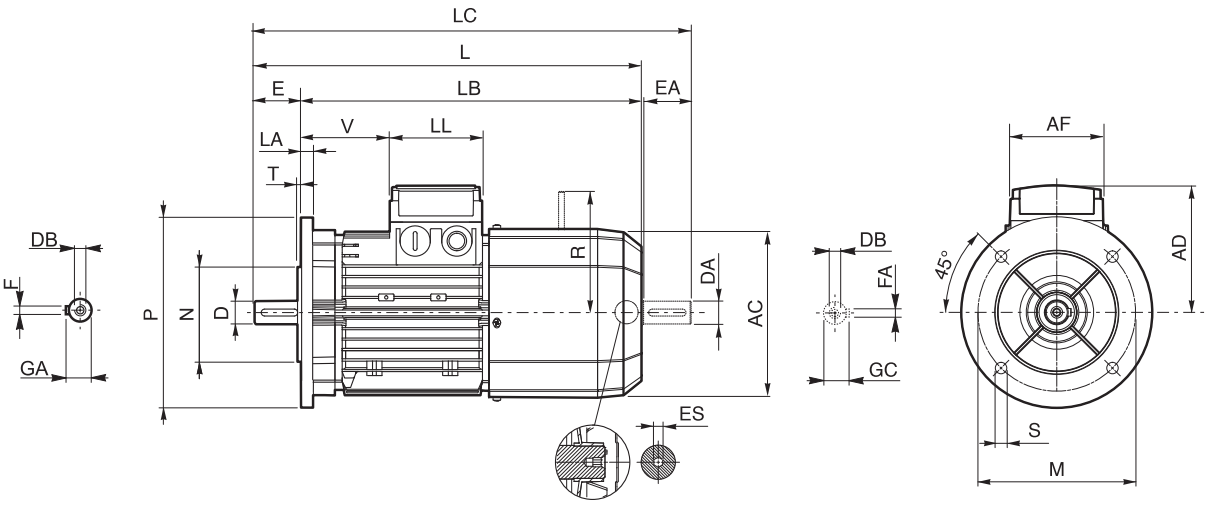

	Shaft					Flange						Motor									
	D DA	**E EA**	**DB**	**GA GC**	**F FA**	**M**	**N**	**P**	**S**	**T**	**LA**	**AC**	**L**	**LB**	**LC**	**AD**	**AF**	**LL**	**V**	**R**	**ES**
BN 63	11	23	M4	12.5	4	115	95	140	9.5	3	10	121	272	249	297	95	74	80	26	116	5
BN 71	14	30	M5	16	5	130	110	160		3.5	11.5	138	310	280	342	108			68	124	
BN 80	19	40	M6	21.5	6	165	130	200	11.5			156	346	306	388	119			83	134	
BN 90	24	50	M8	27	8							176	409	359	461	133	98	98	95	160	6
BN 100	28	60	M10	31		215	180	250	14	4	14	195	458	398	521	142			119		
BN 112											15	219	484	424	547	157			128	198	
BN 132	38	80	M12	41	10	265	230	300			20	258	603	523	686	210	140	188	46	200 (2)	
BN 160 MR	42 38 (1)	110 80 (1)	M16 M12 (1)	45 41 (1)	12 10 (1)	300	250	350	18.5	5	15		672	562	755	193	118	118	218	217	
BN 160 M												310	736	626	820	245	187	187	51	247	—
BN 160 L																					
BN 180 M				51.5 41 (1)	14 10 (1)								780	670	864						

NOTE:
1) These values refer to the rear shaft end.
2) For FA07 brake value R=217.

Dimensions AD, AF, LL and V, relevant to terminal box of motors BN…FA featuring the separate brake supply (option SA), are coincident with corresponding dimensions of same-size BN…FD motors

ES hexagon is not supplied with PS option.

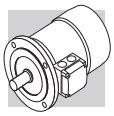

M

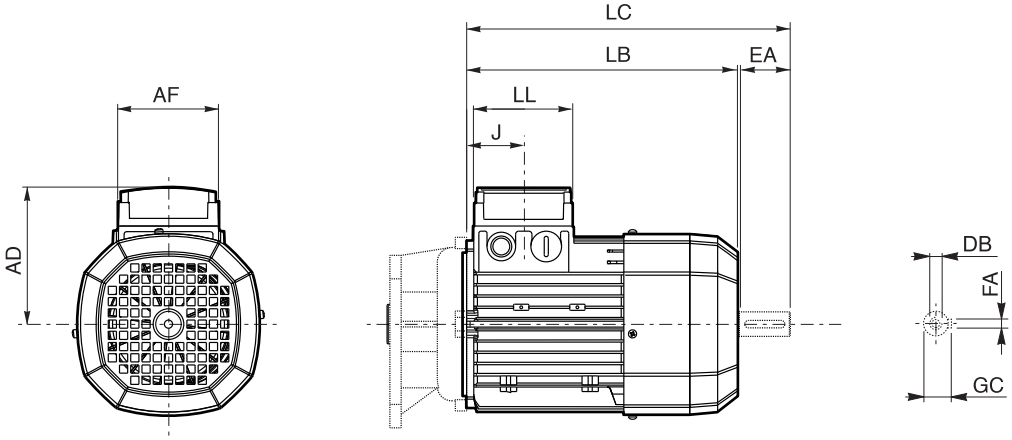

	Rear shaft end					Motor						
	DA	**EA**	**DB**	**FA**	**GC**	**AC**	**LB**	**LC**	**AF**	**LL**	**J**	**AD**
M 0	9	20	M3	3	10.2	110	133	155	74	80	42	91
M 05	11	23	M4	4	12.5	121	165	191			48	95
M 1	14	30	M5	5	16	138	187	219			45	108
M 2 S	19	40	M6	6	21.5	156	202	245			44	119
M 3 S	28	60	M10	8	31	195	230	293	98	98	53.5	142
M 3 L							262	325				
M 4	38	80	M12	10	41	258	361	444	118	118	64.5	193
M 4 LC							396	479				
M 5 S						310	418	502	187	187	77	245
M 5 L							462	546				

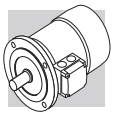

M_FD

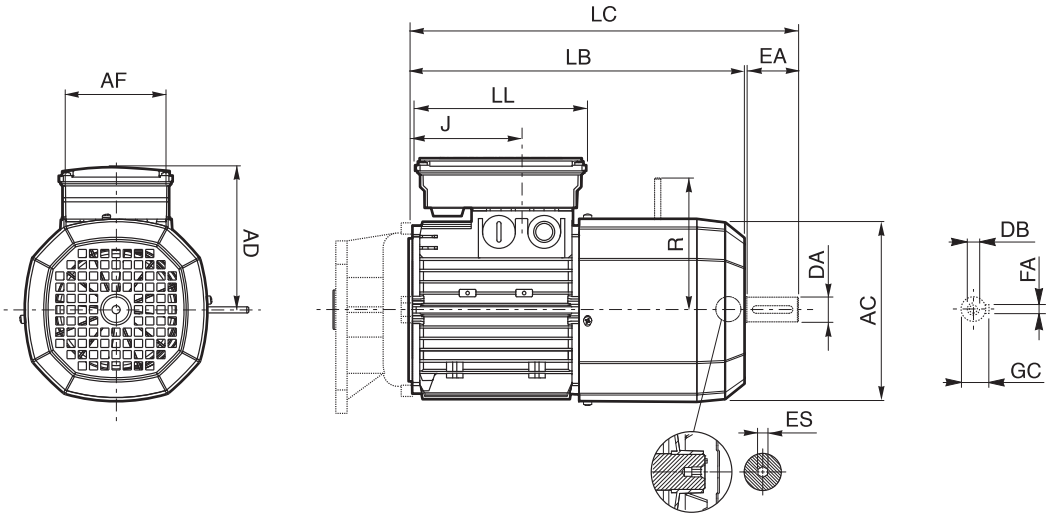

	Rear shaft end					Motor								
	DA	**EA**	**DB**	**FA**	**GC**	**AC**	**LB**	**LC**	**AF**	**LL**	**J**	**AD**	**R**	**ES**
M 05	11	23	M4	4	12.5	121	231	256	98	133	48	122	96	5
M 1	14	30	M5	5	16	138	248	280			73	135	103	
M 2 S	19	40	M6	6	21.5	156	272	314			88	146	129	
M 3 S	28	60	M10	8	31	195	326	389	110	165	124.5	158	160	6
M 3 L							353	416						
M 4	38	80	M12	10	41	258	470	553	140	188	185.5	210	204 (1)	
M 4 LC							495	578			64.5		226	
M 5 S						310	558	642	187	187	77	245	266	—
M 5 L							602	686						

NOTE:
1) For FD07 brake value R=226.

ES hexagon is not supplied with PS option.

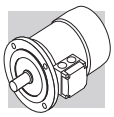

M_FA

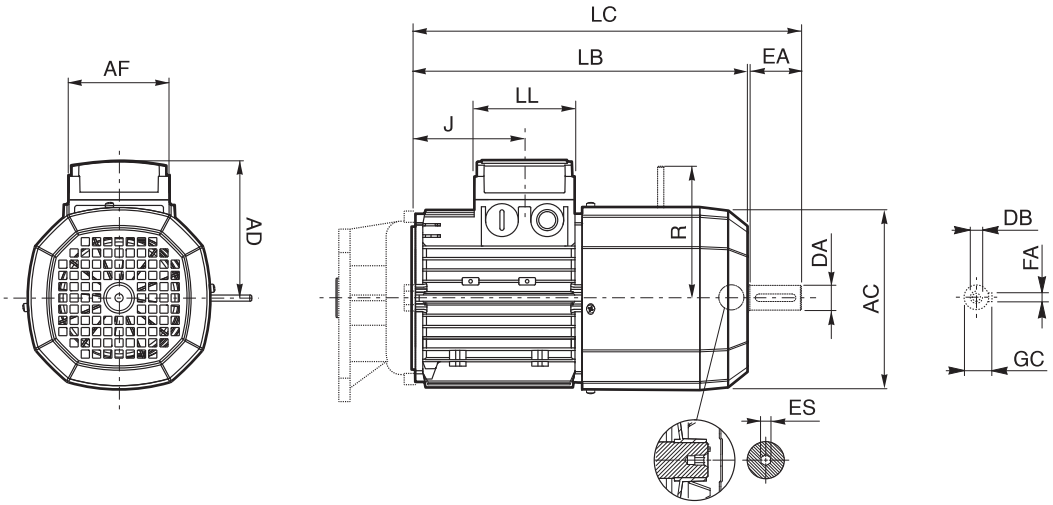

	Rear shaft end					Motor								
	DA	**EA**	**DB**	**FA**	**GC**	**AC**	**LB**	**LC**	**AF**	**LL**	**J**	**AD**	**R**	**ES**
M 05	11	23	M4	4	12.5	121	231	256	74	80	48	95	116	5
M 1	14	30	M5	5	16	138	248	280			73	108	124	
M 2 S	19	40	M6	6	21.5	156	272	314			88	119	134	
M 3 S	28	60	M10	8	31	195	326	389	98	98	124.5	142	160	6
M 3 L							353	416						
M 4	38	80	M14	10	41	258	470	553	140	188	185.5	210	200 (1)	
M 4 LC							495	578			64.5		217	
M 5 S			M12			310	558	642	187	187	77	245	247	—
M 5 L							602	686						

NOTE:
1) For FA07 brake value R=217.

Dimensions AD, AF, LL and V, relevant to terminal box of motors M…FA featuring the separate brake supply (option SA), are coincident with corresponding dimensions of same-size M…FD motors

ES hexagon is not supplied with PS option.

INDEX OF REVISIONS

BR_CAT_CAFS_STD_ENG_R09_3	
	Description
170	Amended drawings for the backstop option of serie A gearboxes.
486, 487	Updated 1.5 kW technical data for gearmotors series S.
512…571	Updated section “Electric Motors”.
...	Removed combinations of gearboxes C514 and F514 with inputs P132 and M4.
40…45	Updated 0.37 ; 0.55 kW technical data for gearmotors series C.

2018 03 31

Bonfiglioli
Forever Forward

We have a relentless commitment to excellence, innovation and sustainability. Our team creates, distributes and services world-class power transmission and drive solutions to keep the world in motion.

HEADQUARTERS
Bonfiglioli Riduttori S.p.A.
Via Giovanni XXIII, 7/A
40012 Lippo di Calderara di Reno
Bologna (Italy)
tel: +39 051 647 3111
fax: +39 051 647 3126
bonfiglioli@bonfiglioli.com
www.bonfiglioli.com